SOMMER

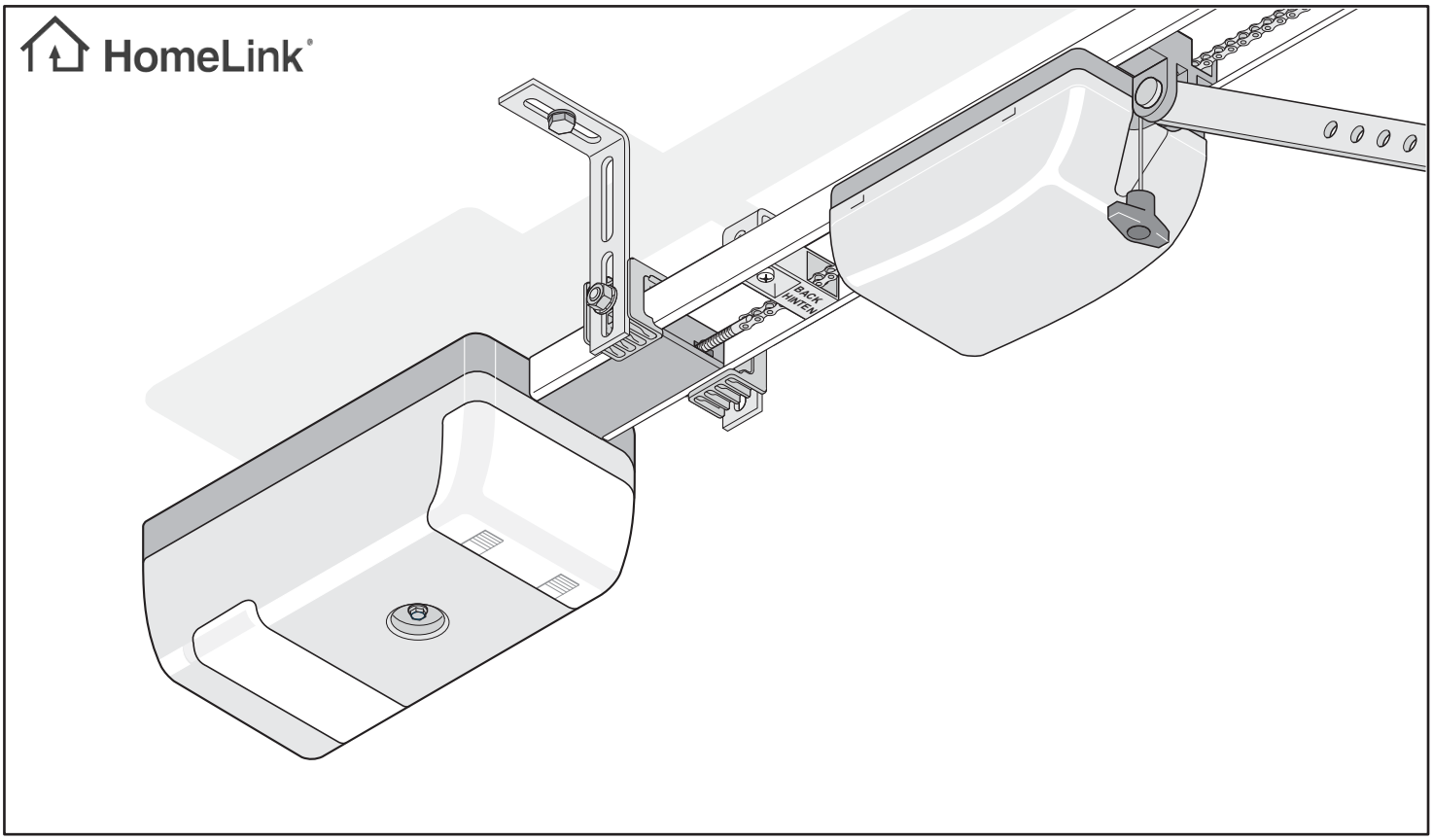

EN TRANSLATION OF THE ORIGINAL INSTALLATION AND OPERATING MANUAL

Garage door operator
marathon 550-, 800-, 1100 SL

Table of contents

General Information 3
- Symbols 3
- Safety instructions 3
  - General 3
  - Storage 3
  - Operation 3
  - Radio remote control 3
  - Type plate 3
- Intended use 3
- Max. permissible door dimensions * 4
- Technical data 4
- Scope of supply 5

Installation preparations 7
- Safety instructions 7
- Tools required 7
- Personal safety equipment 7
- Install slip door safeguard or emergency release lock 7

Installation 8
- Safety instructions 8
- Door types and accessories * 8
- Tips for installation 8
- Pre-installation 9
- Installing 11
- Mount the button and connect 13
- Install the wall socket 13

Initial operation 14
- Safety instructions 14
- Adjust door end positions for CLOSE + OPEN 14
- Programming the drive 14
- Check door end positions for OPEN + CLOSED 15
- Checking the emergency release 15
- Check the force settings 15
- Programming the hand-held remote control 15
- Mount the information sign 15
- Attaching the warning sign 16

Operation/Use 17
- Safety instructions 17
- Open door 17
- Close door 17
- Pulse sequence of door movement 17
- Emergency release 17
- Control unit reset 17
- Intermediate stop 18
  - Safety stop 1 (power cut-off) 18
  - Safety stop 2 (safety input) 18
- Overload protection 18
- Operation after a power failure 18
- Radio receiver 18
  - Safety instructions 18
  - Display and button explanation 18
  - Programming the hand-held remote control 19
  - Deleting a hand-held remote control button from the radio receiver 19
  - Deleting a channel from the radio receiver 19
  - Deleting the radio receiver memory 19
- Connecting external antenna 19
- What is button 2 for? 19

Functions and connections 20
- General information 20
- Obstacle detection (DIP 1, 2 + 3) 20
  - Drive behavior when opening the door 20
  - Drive behavior when closing the door 20
- Mode of operation: safety connection 1 (DIP 2) 20
- Prewarning time (DIP 5) 20
- Backjump (DIP 6) 20
- Defined opening and closing (DIP 7) 20
- Partial opening (DIP 8) 20
  - Partial opening with 2 buttons 20
  - Partial opening with the hand-held remote control (2-channel operation) 21
- Automatic closing (DIP 4) 21
  - Two-lane control with red traffic light 21
  - Variant 1: automatic closing function 21
  - Variant 2: automatic closing + photo eye 21
  - Variant 3: automatic closing + safety contact strip (8.2 kOhm) + photo eye 22
- Direct connector, 24-pole 22
- Carriage circuit board 22
- Connect button 1 22
- Connect button 2 22
- Connecting photo eye 1 23
- Connect 8.2 kOhm strip 23
- Connecting photo eye 2 23
- Chain and C-rail 23
- 24 V connection 23
- Transformer 23
- Connecting warning light 1 23
- Connecting warning light 2 24
- 12 V connection 24
- Floating relay output 24
- Connecting external antenna 24
- TorMinal interface 24
- Connecting Fraba system 24
  - Variant 1: Fraba system + photo eyes 25
- Special functions 25

Maintenance and care 26
- General information 26
- Cleaning chains and drive unit rail 26
- Replacing light bulbs 26
- Replacing fuse (warning light connection) 26
- Regular testing 27

Miscellaneous 28
- Disassembly 28
- Disposal 28
- Warranty and customer service 28

Troubleshooting 29
- Tips on troubleshooting 29

General Information

Symbols

ATTENTION SYMBOL:
Important safety instructions!
Attention – to ensure personal safety, it is important to observe all instructions. Save these instructions!

NOTE SYMBOL:
Information, useful advice!

1 (1) Refers to a respective picture in the introduction or main text.

Safety instructions

General

- These installation and operating instructions must be read, understood and complied with by persons who install, use or perform maintenance on the drive.
- Installation, connection and initial commissioning of the drive may only be carried out by technically knowledgeable persons.
- All lines are to be firmly secured, for example, against moving
- Only install the drive on correctly aligned and weight-balanced doors. An improperly aligned door can cause serious injuries or damage the drive.
- The manufacturer assumes no liability for injuries, damage or break-downs that occur due to non-compliance with the installation and operating instructions.
- Ensure that these installation and operating instructions are kept in an easily accessible location within the garage.
- Always ensure compliance with accident prevention regulations and current standards in each respective country.
- Observe and comply with the “ASR A1.7 Technical Regulations for Workplaces” of the German Committee for Workplaces (ASTA), which is mandatory for the operator in Germany.
- Always disconnect the mains plug before working on the drive.
- Only use OEM (Original Equipment Manufacturer) spare parts, accessories and mounting material.

Storage

- The drive must be stored indoors in an enclosed, dry area at a room temperature of –20 – +50 °C.
- The drive should be stored horizontally.

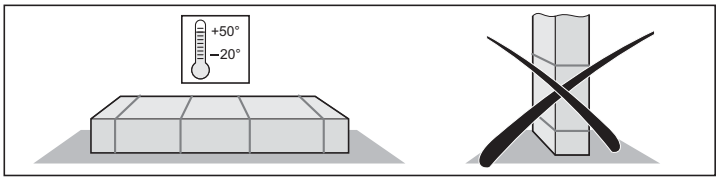

Operation

- The drive may only be operated if a non-hazardous force value has been set. This force value must be set low enough to ensure that the closing force poses no risk of injury.
- Never put your hand near the door when it is moving or near moving parts.
- Continuously monitor the door while it is in motion and keep all persons away from it until the door is completely opened or closed.
- Only pass through the door only once it is completely open.
- Actuating the emergency release can lead to uncontrolled door movements if springs are weakened or broken, or if the door has not been optimally weight-balanced.
- There is a risk of persons being crushed or cut by the mechanism or sharp edges of the door.
- If the garage does not have a separate entrance or the garage door does not have a built-in slip door, you must install an emergency release (release lock or Bowden cable) that can be operated from outside.

Radio remote control

- The remote control must only be used for devices and systems in which radio interference will not endanger people, animals or objects, or the risk is reduced by other safety devices.
- The user must be made aware that systems that pose an accident risk should only be operated – if at all – by remote control if the user can actually see the door.
- The radio remote control may only be used if the door’s movement can be watched and no persons or objects are within the range of movement.
- Store the hand-held transmitter so that unintended operation, e.g., by children or animals, is impossible.
- The operator of the radio-controlled system is not protected against interference from other telecommunications equipment or devices (e.g. radio systems that are being properly operated in the same frequency range). If substantial interference occurs, please contact your appropriate telecommunications office which has radio interference measuring equipment (radiolocation).
- Do not operate the hand-held transmitter in areas with sensitive radio communications or systems (e.g. airports, hospitals).

Type plate

- The type plate is located on the controller housing.
- The type plate shows the exact type designation and the date of manufacture (month/year) of the drive.

Intended use

CAUTION! RISK OF IRREPARABLE DAMAGE TO THE DRIVE!
Do not open or close doors with the drive unless the counterbalance is properly adjusted (springs tensioned). Otherwise, you will damage or destroy the motor (transmission).

CAUTION! RISK OF DEATH!
Remove all cords or straps necessary to operate the door by hand.

- The drive is intended exclusively to open and close doors. Any other use does not constitute intended use. The manufacturer accepts no liability resulting from use other than intended use. The user bears the sole responsibility for any risk involved. It also voids the warranty.
- Doors automated with a drive must comply with all valid standards and directives: e.g. EN 12604, EN 12605.
- The drive may only be used if it is in perfect working order and is used as intended, in conscious observation of safety and hazards and in accordance with the installation and operating instructions.
- Malfunctions which could affect safety must be corrected immediately.
- The door must be stable and rigid, meaning that it may not bend or twist when being opened or closed.
- The drive cannot compensate for defects in the door or incorrect assembly or installation.
- Only use the drive in a dry, non-hazardous area.
- Do not install the drive in areas with a corrosive atmosphere (e.g. salty air).

General Information

Max. permissible door dimensions *

	550 SL	800 SL	1100 SL	Unit
Max. width				
Swinging door	5,000	6,000	8,000	mm
Sectional door	5,000	6,000	8,000	mm
Hinged double door **	2,800	2,800	2,800	mm
Side-sectional or roller door				
• Rails 2600	2,350	2,350	2,350	mm
• Rails 3400	3,150	3,150	3,150	mm
Up-and-over door	4,000	5,500	7,500	mm
Approx. height				
Swinging door				
• Rails 2600	2,600	2,600	2,600	mm
• Rails 3400	3,400	3,400	3,400	mm
Sectional door				
• Rails 2600	2,350	2,350	2,350	mm
• Rails 3400	3,150	3,150	3,150	mm
Hinged double door **	2,800	2,800	2,800	mm
Side-sectional or roller door	2,500	3,000	3,500	mm
Up-and-over door				
• Rails 2600	1,900	1,900	1,900	mm
• Rails 3400	2,700	2,700	2,700	mm
Operating time	40	40	40	%

* Door in accordance with EN 12604, EN 12605

** With standard hinged double door fitting, part no. 1501.
For taller doors, correspondingly longer rails or rail extensions must be installed. Please ask you specialist dealer.

Technical data

	550-, 800-, 1100 SL			Unit
Rated voltage	230			V/AC
Rated frequency	50			Hz
Lighting	Max. 32.5 V, max. 34 W, BA 15 s alternatively 24 V, 21 W, BA 15 s			
Operating temperature range	–20 – +50			°C
Protection type	IP 20			
Working environmental emissions value	< 75 dBA – drive only			
	550 SL	**800 SL**	**1100 SL**	
Max. pulling and pushing force:	550	800	1100	N
Rated tension force	165	240	330	N
Rated current consumption:	0.7	0.8	0.9	A
Rated power consumption:	150	160	190	W
Max. speed:	180	130	130	mm/s
Power consumption, stand-by	~2	~2	~2	W
Weight:				
Rails 2600:	18.0	18.5	19.0	kg
Rails 3400:	20.4	20.9	21.4	kg

Package (L x W x H):		
Rails 2600	1,980 x 240 x 180	mm
Rails 3400	2,365 x 240 x 180	mm

The force limitation, safety input 1 and 2 correspond to performance level C, category 2.

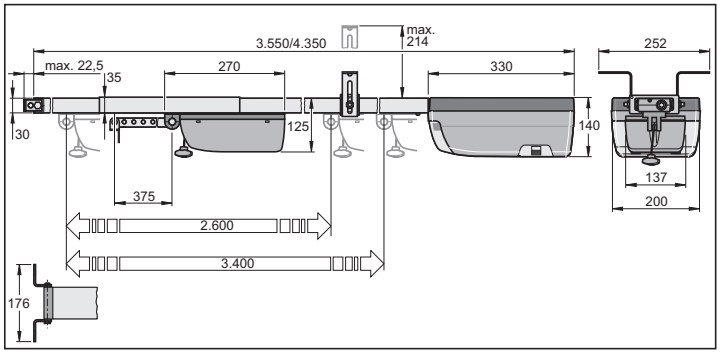

EN Remote control / Radio receiver

EU Conformity Declaration

Messrs

SOMMER Antriebs- und Funktechnik GmbH
Hans-Böckler-Straße 21-27
D-73230 Kirchheim/Teck

declares herewith that the product designated below complies with the relevant fundamental requirements as per Article 3 of the R&TTE Directive 1999/5/EG, insofar as the product is used correctly, and that the following standards apply:

Product: RF Remote Control for Doors & Gates

Type: RM01-868, RM02-868-2, RM02-868-2-TIGA, RM03-868-4, RM04-868-2, RM08-868-2,

RM01-434, RM02-434-2, RM03-434-4, RM04-434-2,

RX04-RM02-868-2-wi6, RX04-RM02-868-2-TT, RX04-RM02-434-2, RX04-RM02-434-2-TT,

RX01-RM02-868-2/4, RX01-RM02-434-4,

TX02-868-2, TX02-868-2-UP, TX03-868-4, TX03-868-4-XP, TX35,-868-1/5, TX04-868- 10/30, TX08-868-4,

TX02-434-2, TX03-434-4-XP, TX04-434-10 TX01-868, TX01-434, TX45-868-10, TX-45-434-10, RM10-868-1

The relevant guidelines and standards are:

- EN 60950-1
- EN 300 220-1
- EN 300 220 -2
- EN 301 489-1
- EN 301 489-3

Kirchheim/Teck, 07.01.2014
Jochen Lude
Responsible for documents

Scope of supply

The actual scope of supply may vary depending on the design of the drive.

Package 1

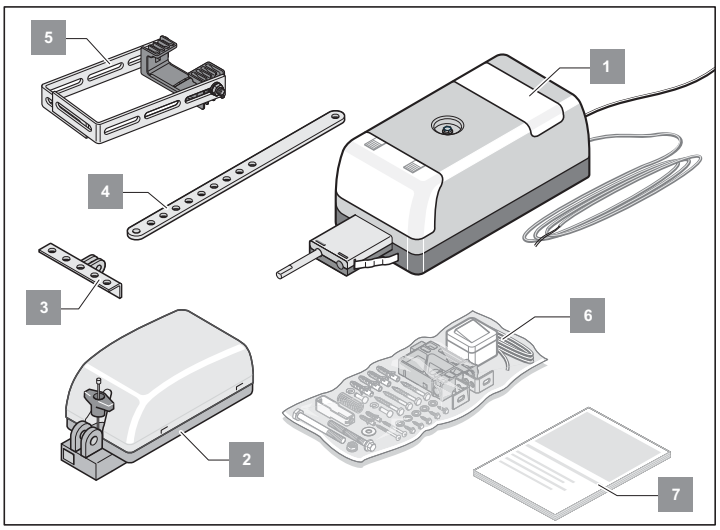

Package 2

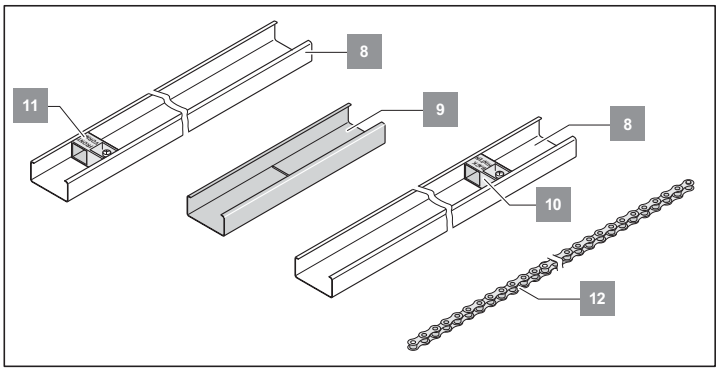

Item	Name	Quantity
1.	Controller housing (button lighting, power cable, lighting)	1
2.	Carriage	1
3.	Door bracket	1
4.	Push rod	1
5.	Ceiling suspension bracket	1
6.	Installation bag	1
7.	Installation and Operating Instructions	1
8.	C-rails (coated)	2
9.	Connecting sleeve (coated)	1
10.	Guide idler “Back/Hinten”	1
11.	Guide idler “Front/Vorne”	1
12.	Chain	1

Declaration of Installation

for the installation of an incomplete machine in accordance
with the Machinery Directive 2006/42/EC, Appendix II, Section 1 B

SOMMER Antriebs- und Funktechnik GmbH
Hans-Böckler-Straße 21 - 27
73230 Kirchheim/Teck
Germany

hereby declares that the garage door operator

marathon 500-, 800-, 1100 SL

was designed, developed and manufactured in compliance with

- Machinery Directive 2006/42/EC
- Low Voltage Directive 2014/35/EU
- Directive on Electromagnetic Compatibility 2014/30/EU
- RoHS Directive 2011/65/EU.

The following norms were used:

• EN ISO 13849-1, PL “C” Cat. 2	Safety of machines – Safety-related parts of controls – Part 1: General design guidelines
• EN 60335-1, where applicable	Safety of electrical appliances/operators for gates
• EN 61000-6-3	Electromagnetic compatibility (EMC) – interference
• EN 61000-6-2	Electromagnetic compatibility (EMC) – interference resistance
• EN 60335-2-95	Safety of electrical appliances for household and similar uses – Part 2: Particular requirements for drives for vertically moving garage doors for residential use
• EN 60335-2-103	General safety requirements for household and similar electrical appliances – Part 2: Special requirements for operators for gates, doors and windows

The following requirements of Annex 1 of the Machinery Directive 2006/42/EC are met:
1.1.2, 1.1.3, 1.1.5, 1.2.1, 1.2.2, 1.2.3, 1.2.4, 1.2.6, 1.3.2, 1.3.4, 1.3.7, 1.5.1, 1.5.4, 1.5.6, 1.5.14, 1.6.1, 1.6.2, 1.6.3, 1.7.1, 1.7.3, 1.7.4
The special technical documentation was prepared in accordance with Annex VII Part B and will be submitted to regulators electronically on request.

The incomplete machine is intended for installation in a gate system only to form a complete machine as defined by the Machinery Directive 2006/42/EC. The gate system may only be put into operation after it has been established that the complete system complies with the regulations of the above EC Directive.

The undersigned is responsible for compilation of the technical documents.

Kirchheim, 20.04.2016

CE

i.V.

Jochen Lude
Responsible for documents

Installation preparations

Safety instructions

ATTENTION!
Important instructions for safe installation.
Observe all installation instructions – improper installation can lead to serious injuries!

- The mains supply line that has been provided may not be shortened or extended.
- The voltage of the power source must correspond with the voltage listed on the drive type plate.
- All devices to be connected externally must have a safe isolation of the contacts from the mains voltage supply, in accordance with IEC 60364-4-41.
- Live parts of the drive (voltage-carrying parts, e.g. C-rail) may not be connected to the ground or with live parts or grounding conductors of other electrical circuits.
- Wiring for external devices must be installed in accordance with IEC 60364-4-41.

CAUTION! RISK OF DEATH!
Remove all cords or straps necessary to operate the door by hand.

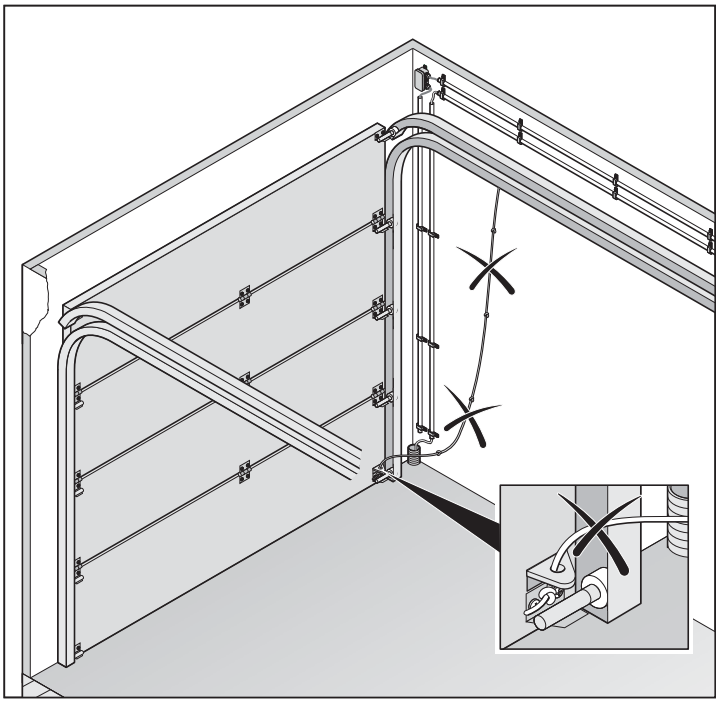

Tools required

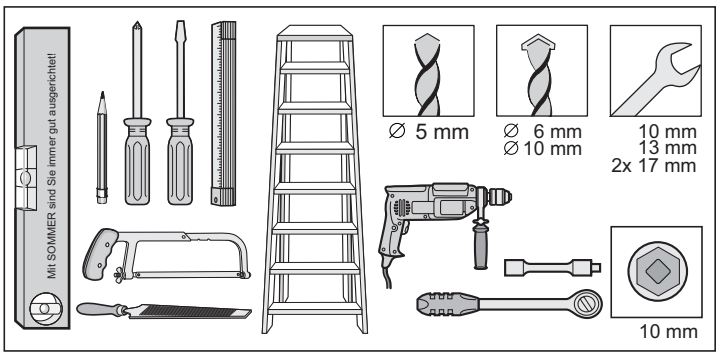

Personal safety equipment

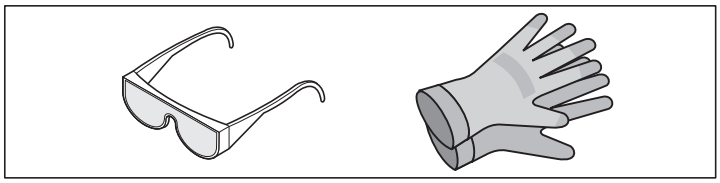

- Safety glasses (for drilling)
- Protective gloves (e.g. when handling cut-off pieces of perforated strip steel)

Install slip door safeguard or emergency release lock

- There is a slip door installed in the door, but no slip door safeguard.
  ⇒ Install slip door safeguard (see accessories instructions).
- There is no slip door in the door and no second entrance to the garage.
  ⇒ Install an emergency release lock or Bowden cable to enable unlocking from outside (see accessories instructions).

Installation

Safety instructions

ATTENTION!
Important instructions for safe installation.
Observe all installation instructions – improper installation can lead to serious injuries!

ATTENTION!
After installation, it is imperative that you check the drive to ensure that it has been correctly adjusted and that it reverses upon contacting a 50 mm high object on the floor.

- The drive may only be installed, connected and commissioned by qualified technicians.
- Do not move the door if there are people, animals or objects in the area of movement.
- Wear safety glasses when drilling the fastening holes.
- Cover the drive during drilling to prevent penetration of dirt.

ATTENTION!
Walls and ceiling must be solid and stable. Only install the drive on a correctly aligned door. An incorrectly aligned door could cause serious injury.

- Doors must be stable in themselves, since high traction and compression forces are encountered. Reinforce lighter doors made of plastic or aluminum if necessary before installation. Ask a specialist retailer for advice.
- Remove or disable door locks.
- Use only approved fasteners (e.g. anchor fittings, bolts). The fasteners must be suitable to the material of the ceilings and walls.
- Check that the door runs smoothly.
- The door must be counterbalanced.

TEST:
Half-open the door by hand. The door must remain in this position. If the door moves up or down, re-adjust the door mechanically. Ask a specialist retailer for advice.

Check the distance between the door's highest point (THP, see graphic 8) and the ceiling. The distance between the THP and the lower edge C must be between 5 mm and 65 mm; the angle of the door arm must be max. 30° (see graphic 8). If the distance is less than this, the drive must be moved back and a longer push rod must be installed. Ask a specialist retailer for advice.

Door types and accessories *

* Accessories not included in the scope of delivery

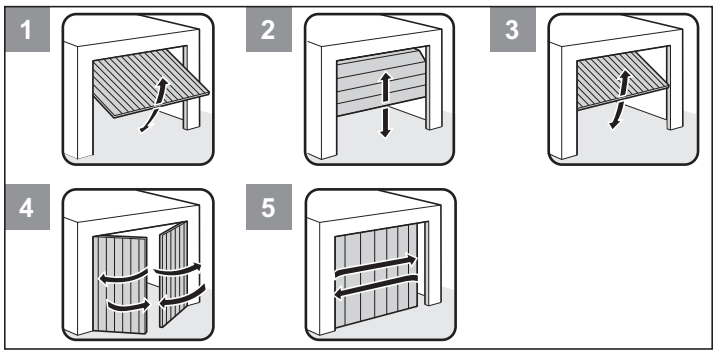

No.	Door type	Accessories
1	Swinging door	No accessories required
2	Sectional door with single running rail	Sectional door fitting with boomerang *
2	Sectional door with double running rail	Sectional door bracket without boomerang
2	Sectional overhead door	No accessories required
3	Up-and-over door	Curved arm *
4	Hinged double door	Hinged double door fitting *
5	Roller door, side-sectional door	Consult your specialist dealer

Tips for installation

- Check the delivery scope components before beginning installation; this way you save time and unnecessary effort if a part is missing.
- With two persons, installation can be carried out quickly and safely.
- Ensure that the door does not become twisted or jammed in the running rails.

CHECK:
Open and close the door by hand several times at the location where the drive is to be installed. If the door can be operated easily at this location (without exceeding the specified forces), then the drive can be installed.

Emergency release

In a garage without a separate entrance (e.g. slip doors), the drive's emergency release must be operable from outside.
Thus, position the emergency release so that it externally accessible; this can be done with a Bowden cable or an emergency release lock.
For this purpose, Backjump (DIP switch 6 ON) should always be switched on. Refer to the chapter “Functions and connections – Backjump (DIP 6)”.

Swinging doors

Because the mechanical locking of a door equipped with a drive must be removed or disabled, depending on the design of the door, it could be possible to manually raise the door approx. 50 mm. To counteract this, spring catches can installed to lock the door in addition to the drive. These spring catches are connected to the drive by means of a locking set; when opening a door, the spring catches must first be disengaged before the drive can open the door.

Hinged double door, roller door or side-sectional door

With drives that push one of the previously mentioned doors ahead (see graphic below), the polarity of wires 12 + 13 must be reversed on the direct connector. Refer to the chapter “Functions and connections – 24-pole direct connector”.

Pre-installation

Open both packages and inspect the delivery scope.

NOTE!
Dispose of the packaging according to locally applicable regulations.

Remove both C-rails (8), connecting sleeve (9) and controller housing (1) from the packaging (see chapter “General information – delivery scope”), place in the garage (the controller housing (1) is located inside the garage) and have tools readily at hand.

ATTENTION!
Make sure that all components are not lying directly on a hard surface. To protect the components, place cardboard, covers or other soft surfaces underneath.

1

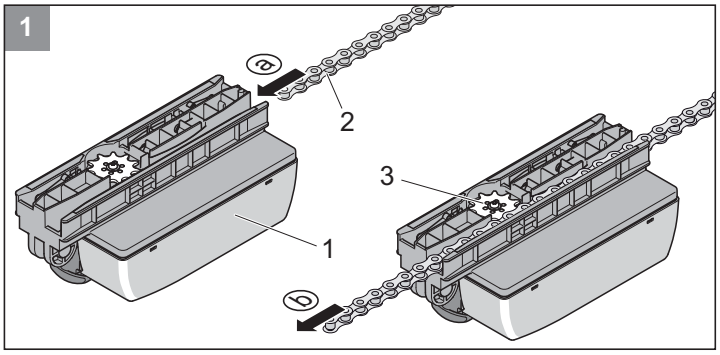

1 Insert the chain (2) from behind into the carriage (1).
Ensure that the chain (2) lies correctly on the chain wheel (3).

2a

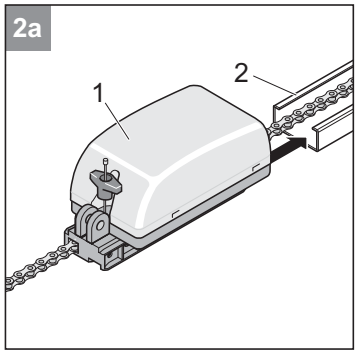

2b

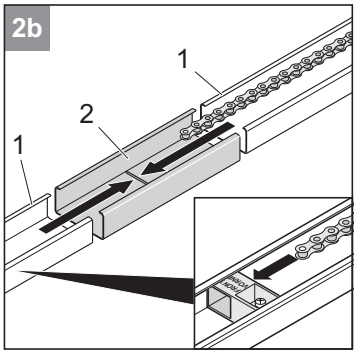

2a Put the carriage contact springs in place. Slide the carriage (1) with chain onto the rails (2) with the red guide idler.
The tip of the guide idler must point toward the carriage (1).
Push the chain through the guide idler.

2b Push the two rails (1) over the connecting sleeve (2) up to the stop position. You now have a single continuous rail. When pushing the rails together, ensure that the chain is guided through the guide idler.
The tip of the guide idler must point toward the carriage (1).

3a

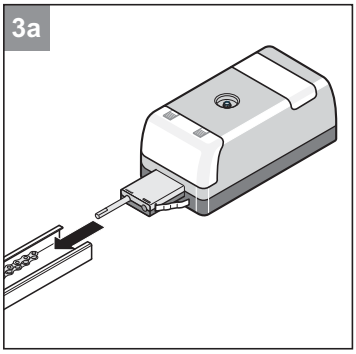

3b

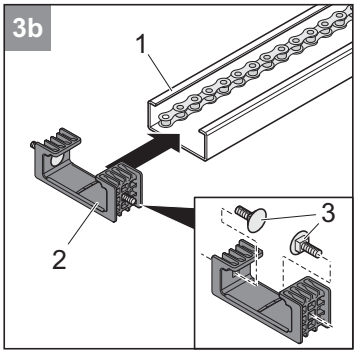

3a Push the controller housing up to the stop position at the rear of the rail and put the carriage contact springs in place. Make sure that the chain attachment bolt of the controller housing runs on the same side as the chain.

3b Insert the screws (3) into the ceiling holder (2). Push the ceiling holder with inserted screws onto the rear end of the rail. The guide idler is located at the rear end of the rail.

IMPORTANT!
The wiring grommet must be on the bottom of the controller housing.

4

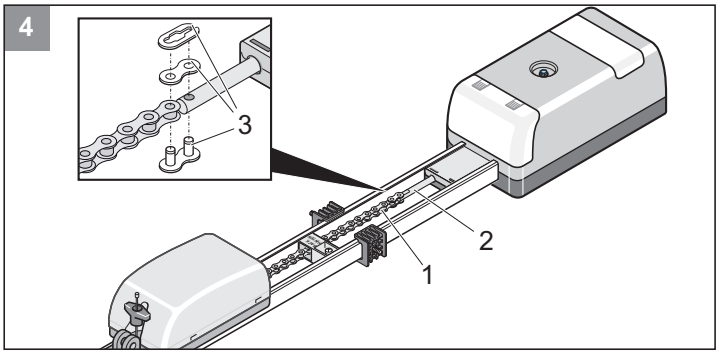

4 The chain (1) is connected to the chain attachment bolt of the controller housing (2) by means of the chain lock (3).

5

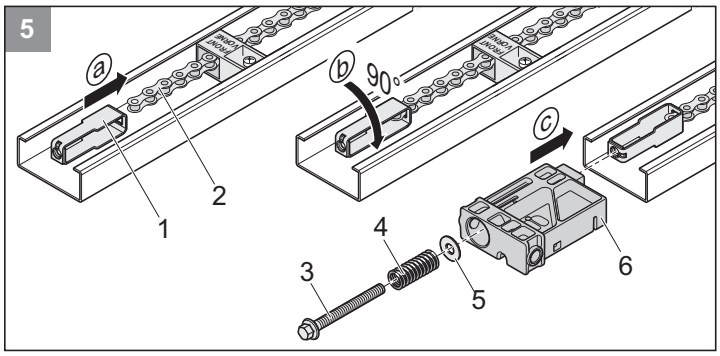

5 a) Hook the tensioner (1) into the chain (2).
b) Turn the tensioner 90°.
c) Push the slide-in part (6) in the rail and insert the tensioner.
Put the washer (5) and spring (4) on the tensioning screw (3) and screw the tensioning screw (3) into the tensioning element.

Installation

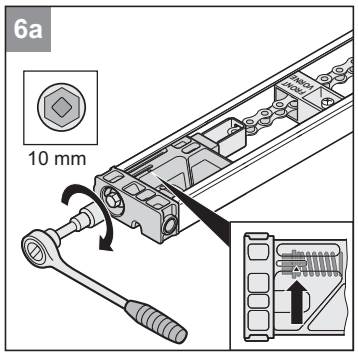

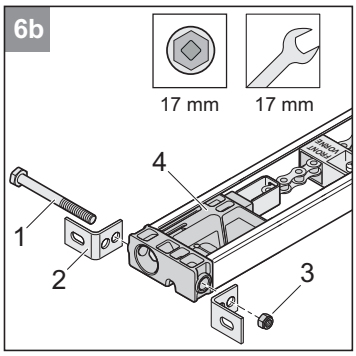

6a Tighten the chain as far as the mark (arrow).

6b Fasten the two headers (2) with bolt (1) and washers (3) on the slide-in part (4), but not completely tight yet.

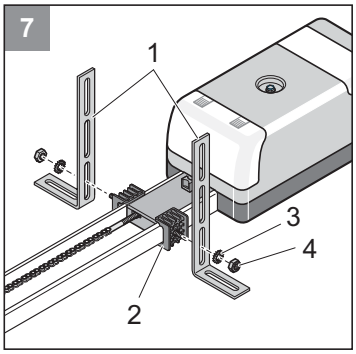

7 Mount the two steel brackets (1) with washers (4) and toothed lock washers (3) onto the ceiling holder (2).

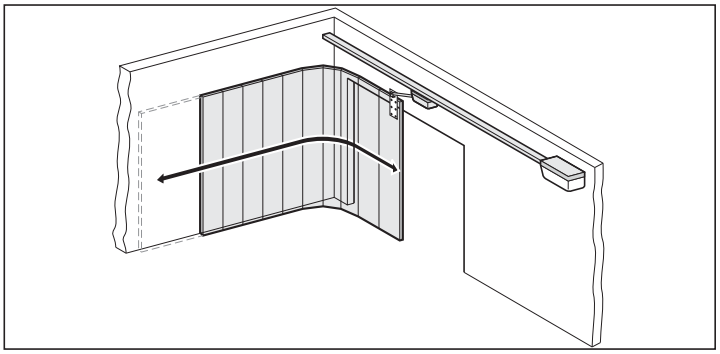

Additional signal sources are: hand-held transmitters, Telecody, wireless indoor switches and key switches. In the case of the hand-held transmitter, Telecody or the wireless indoor switches, a connecting line to the drive is not required; consult your dealer.

Adjusting the top roll of a sectional door

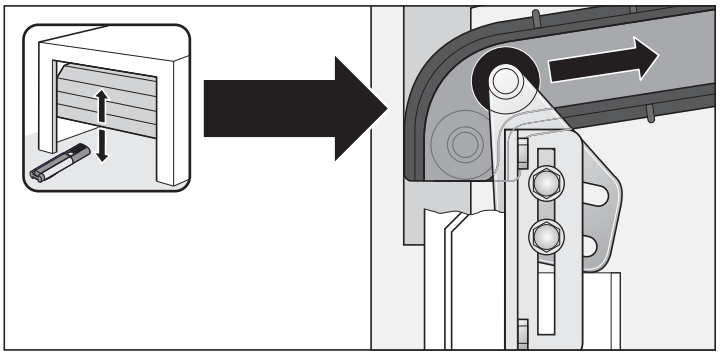

Installing

ATTENTION!
Use a surefooted and stable ladder.

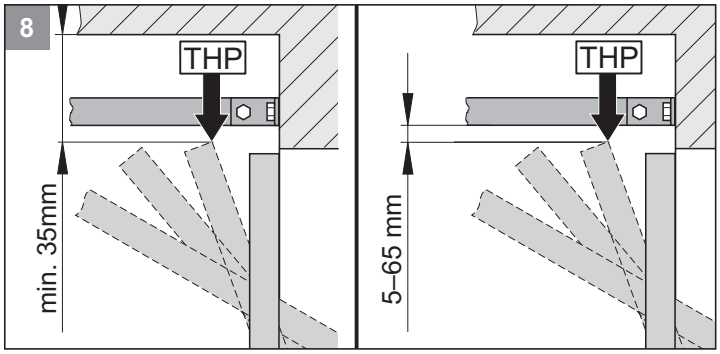

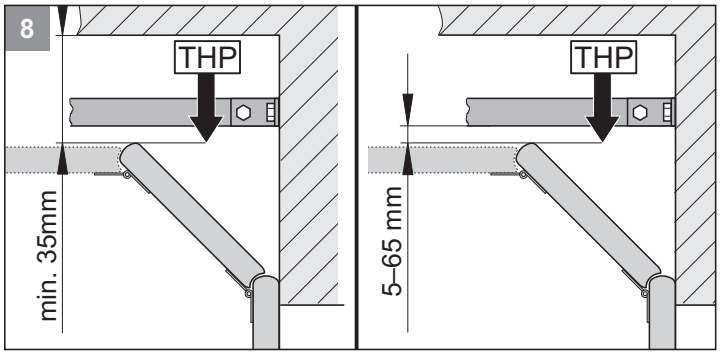

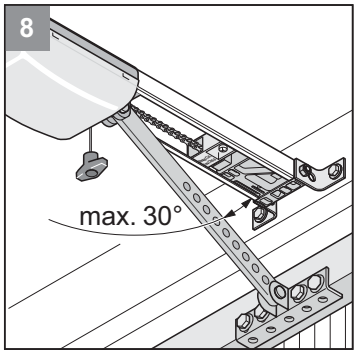

NOTE!
If the distance between the ceiling and the bottom edge of the C-rail is greater than 245 mm, extend the ceiling suspension bracket with perforated strip steel.

NOTE!
Please observe that the distance may possibly be reduced if a door handle is attached to the middle of the door. The door must be able to run freely.

8 Determine the door's highest point (THP):
Open the door and measure the closest distance (min. 35 mm) between the top edge of the door and the ceiling. The distance between the THP and the bottom edge of the C-rail must be between 5 mm and 65 mm; the angle of the door arm must be max. 30°.

Installation

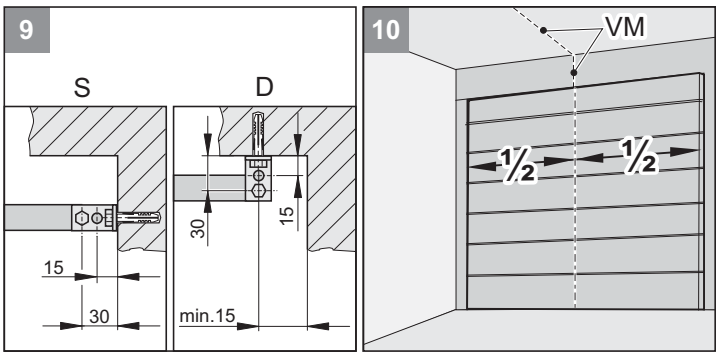

NOTE!
If installing on the ceiling (D), space the drill holes 15 mm apart if possible. Reduced tilting angle of the mounting bracket.

9 The drive can be mounted on the header (S) or on the ceiling (D).

10 Measure the front of the center of the door (VM) and mark on the door and header or ceiling.

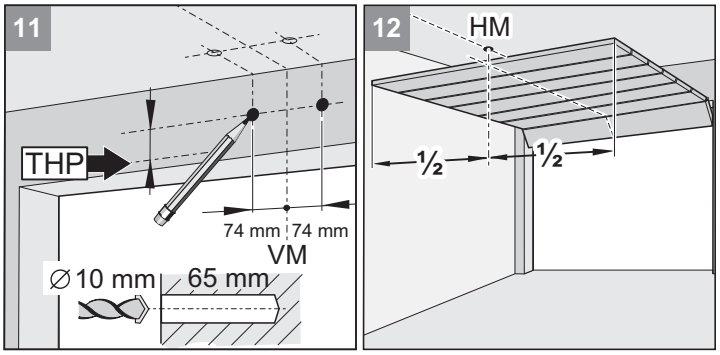

11 Make a mark 74 mm to the right and left of the center of the door (VM) and fasten at the same height on the header or ceiling (as per picture 9). Drill two holes (Ø 10 x 65 mm deep).

NOTE!
Wear safety glasses while drilling.
Take into account the thickness of the ceiling, especially with regard to prefab concrete garages!

12 Open the door. Project the mark from the center of the door to the ceiling (HM). Close the door.

NOTE!
Protect the controller housing (6) against damage.

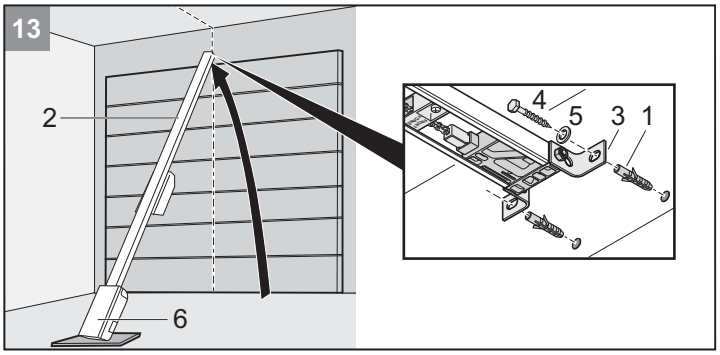

13 Insert anchor fittings (1). Lift the drive (2) at the front. Tightly fasten header fitting (3) at the front with two bolts (4) and U-washers (5).

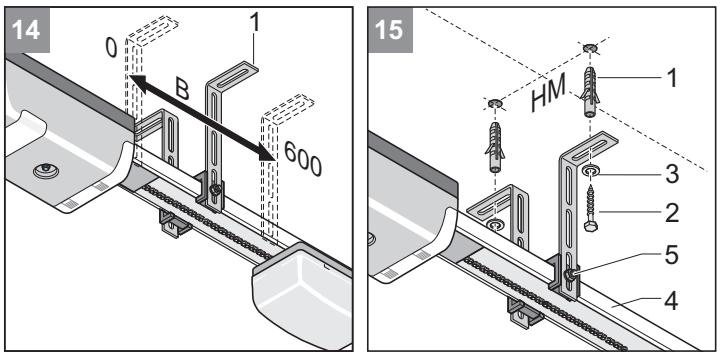

ATTENTION!
Always ensure that the drive is installed parallel to the running rails of the door.

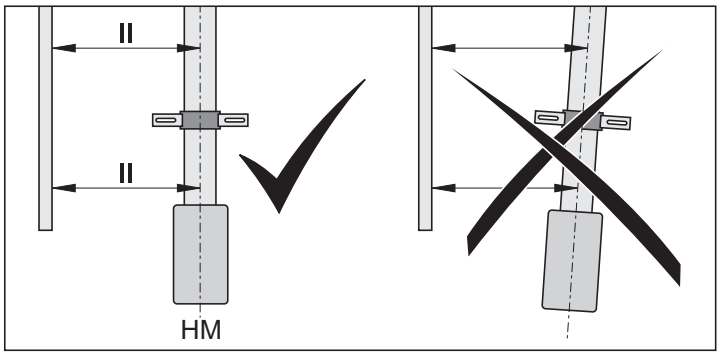

14 Raise the drive.
Align the ceiling suspension bracket (1). The position should be in the range of (W = 0 …600 mm).

15 Align the drive horizontally to the rear of the center of the door (HM). Mark the drill holes. Drill two holes (Ø 10 x 65 mm deep).

NOTE!
Wear safety glasses when drilling. Take the thickness of the ceiling into consideration, especially with regard to prefab concrete garages.

Insert anchor fittings (1). Place U-washers (3) under the two bolts (2). Firmly tighten the bolts (2).
Vertically align C-rails (4), e.g. with a spirit level. If required by this, reposition the bolts (5). Tighten the bolts (5).

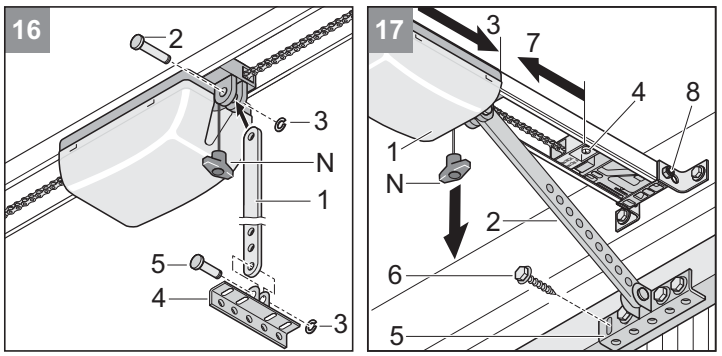

NOTE!
Choose suitable bolts depending on what the door is made of. Wear safety glasses when drilling!

16 Install the push rod (1):
Insert the bolts lengthwise (2) and slide on the clamp (3).
Briefly fasten door bracket fitting (4) to the push rod (1) with bolts (5) and slide on the clamp (3).

17 Pull once on the emergency unlocking cord (N). The carriage (1) is unlocked. Tighten the bolt (8) on the header fitting.
Slide the carriage (1) all the way to the front (3) with the push rod (2).
Loosen the guide idler (4) if necessary to do this.
Align the door bracket fitting (5) with the center of the door (VM) and mark 5 drill holes. Drill 5 holes (Ø 5 mm).

Insert hex bolts (6) and tighten firmly.
Loosen guide idler (4) and completely slide onto the carriage (7).
Tighten the guide idler screw (4).

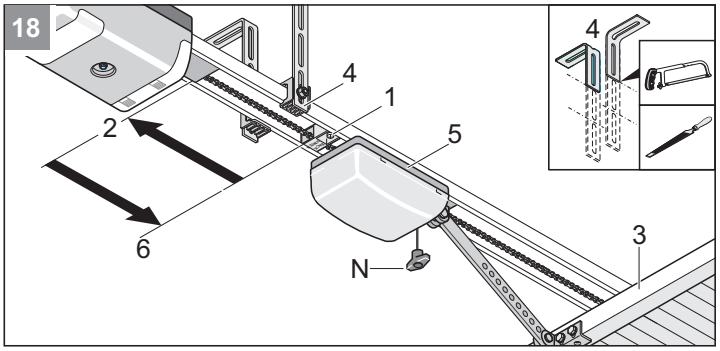

NOTE!
Shorten the protruding ceiling suspension bracket **(4), e.g. by cutting off and deburring.**

18 Loosen the guide idler (1) and push it completely back to the stop position (2). Open the door (3) by hand. Push guide idler (1) all the way up to the carriage (5). Tighten the screw on the guide idler (1).

Mount the button and connect

ATTENTION!
Control or regulating units in a fixed position must be mounted within sight of the door. They may not, however, be mounted close to moving parts and must be at least 1.5 m above the ground.

NOTE!
Never route the switch cable (7 m length) along a power line, as this could otherwise cause interference in the controller. In the delivery scope, the switch cable is already connected to the controller. Permanently install the switch cable.

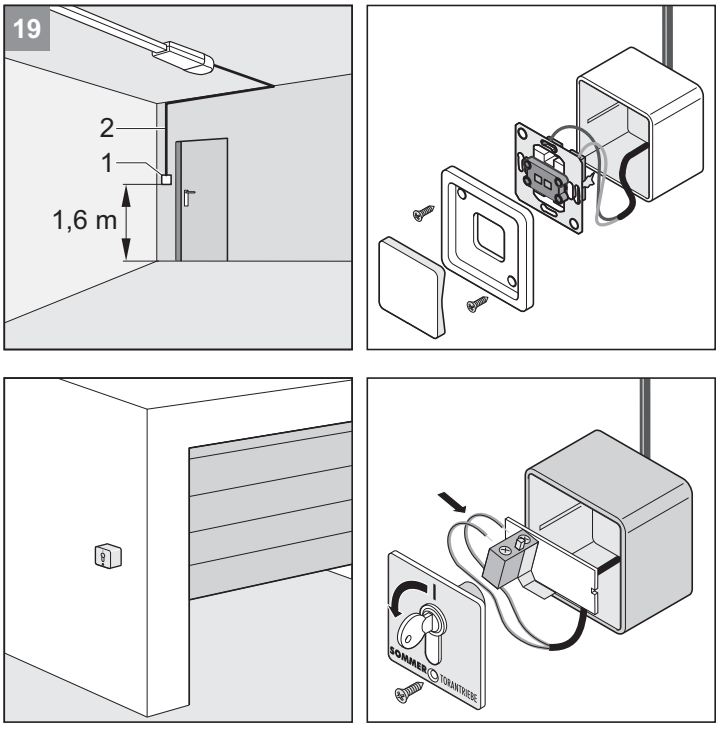

19 Install the key switch (1) in a suitable, easily accessible position in the garage. Minimum height above the ground: 1.6 m.
Install the switch cable (2) in the garage. Connect the end of the cable to the button (1).

Install the wall socket

ATTENTION!
Wall sockets may only be installed by a trained electrician. Protect the wall socket with a circuit breaker (16 A, slow-blow). Comply with all applicable regulations (e.g. the German VDE).

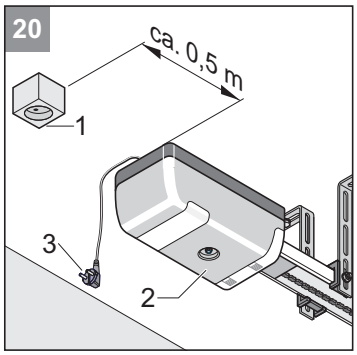

20 Install the socket (1) on the ceiling at a distance of approx. 0.5 m from the controller housing (2). Install and hook up the connecting line from the socket (1) to the electrical power mains.

ATTENTION!
Do not plug the power mains plug (3) into the socket yet.

ATTENTION!
After installation, it is imperative that you check the drive to ensure that it has been correctly adjusted and that it reverses upon contacting a 50 mm high object on the floor.

ATTENTION!
After installation, it is imperative to check whether the drive stops when it encounters a 20 kg load that attached to the middle of the bottom edge of door.

ATTENTION!
After installation, ensure that no parts of the protrude into public sidewalks or streets.

Safety instructions

RISK OF INJURY!
The force setting is relevant to safety and must be carried out by trained specialists with the utmost caution. If the force tolerance is too high, persons or animals could be injured and objects damaged.
Select the force tolerance to be as low as possible to ensure that obstacles are detected quickly and safely.

DANGER OF FALLING!
Actuating the emergency release can lead to uncontrolled door movements if springs are weakened or broken, or if the door has not been optimally weight-balanced.

NOTE!
After installation of the drive, the person responsible for the installation must complete an EC declaration of conformity for the door system in accordance with the Machinery Directive 2006/42/EC, and apply the CE mark and a type plate. This is also required for private installations, including if the drive is retrofitted to a manually-operated door. This documentation and the Installation and Operating Instructions are retained by the operator.

Adjust door end positions for CLOSE + OPEN

NOTE!
Only open or close the door by hand during while adjusting; do not use the engaged drive.

The running path of the drive can be extended or shortened (V + H) by means of the guide idlers.

Check whether the door opens and closes completely. If this isn't the case, then the running path and/or the limit stops must be adjusted.

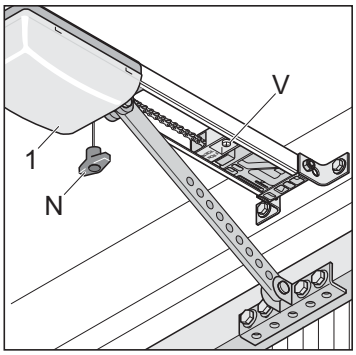

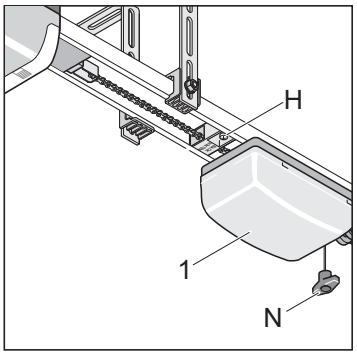

Door end position CLOSED

1. Unlock the carriage. Pull once on the emergency unlocking cord (N). It should be possible to manually push the carriage back and forth.
2. Close the door by hand.
3. Loosen the guide idler (V) and push it toward the carriage until it clicks.
   ⇒ Limit switch switches.
4. Tightly fasten the guide idler (V).

Door end position OPEN

1. Open the door by hand.
2. Loosen the guide idler (H) and push it toward the carriage until it clicks.
   ⇒ Limit switch switches.
3. Tightly fasten the guide idler (H).
4. Close the door by hand.

Lock the carriage (1).

1. Pull once on the emergency unlocking cord (N).
2. Manually push the carriage a bit until the chain wheel makes an audible click.
   ⇒ The chain wheel makes a loud click sound when it snaps into place.

Programming the drive

The control system has an automatic force setting. The control system automatically records the force required during the “OPEN” and “CLOSE” door movements and stores it when the end positions have been reached.

ATTENTION!
Before sticking in the power mains plug, ensure that the voltage of the power source corresponds with the voltage listed on the drive type plate.

1. Stick in the power mains plug.
   ⇒ The lamp (2) blinks.

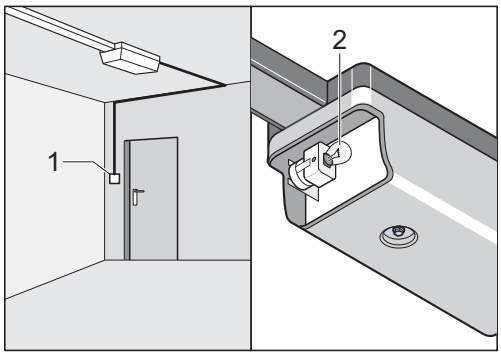

NOTE!
The first movement of the drive after switching on the mains power must always be door OPEN. If this isn't the case, then reverse the cables at terminals 12 + 13.

2. Press button (1).
   ⇒ The door opens to the until the door OPEN end position is reached.
3. Press the button (1).
   ⇒ The door closes until the door CLOSED end position is reached.
4. Reset the controller. Controller reset according to drive type: see chapter “Operation/use – controller reset”.

Perform the following procedure twice:

1. Press button (1) once.
   ⇒ Door opens to guide idler (H, door OPEN).
   ⇒ The lamp (2) blinks.
2. Press button (1) once.
   ⇒ Door closes to guide idler (V, door CLOSED).
   ⇒ The lamp (2) blinks.
3. If the lamp (2) lights up, the force values have been recorded and stored.
   ⇒ Drive has been successfully programmed!

Initial operation

Check door end positions for OPEN + CLOSED

The running path of the drive can be extended or shortened by means of the guide idlers.

Check whether the door opens and closes completely. If this isn't the case, then the running path must be adjusted.

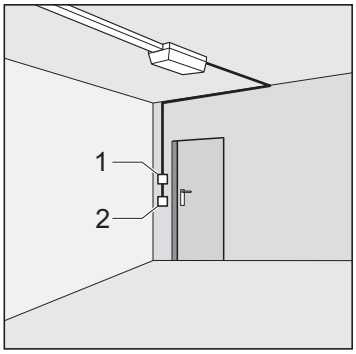

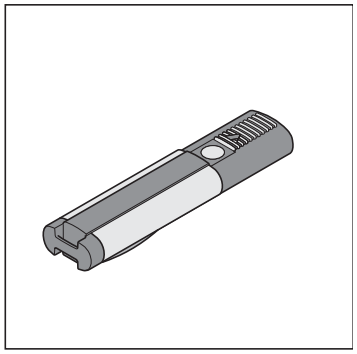

1. Actuate control device (e.g. button, hand-held transmitter, etc.) once.
   ⇒ The door opens to the until the door OPEN end position is reached.
2. Check whether the door reaches the desired end positions.
   ⇒ Adjust the end positions if necessary. See the chapter “Commissioning – adjusting the door Closed + Open end positions”.

Checking the emergency release

NOTE!
You can activate Backjump for sectional doors or doors with ceiling guides by means of DIP switch 6; this relieves the drive and door mechanisms. Simpler actuation of the emergency release.

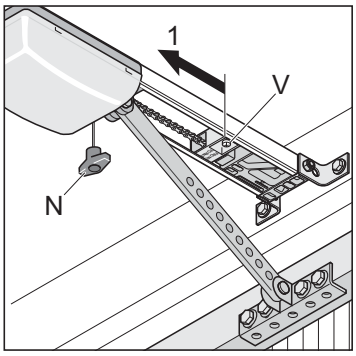

1. Close the door with the drive.
2. Pull once on the emergency release (N).
   If the emergency release cannot be actuated, loosen the end switch (V) and push it a bit in direction (1).
3. Open and close the door with the drive. Recheck the emergency release.

Check the force settings

For every run of the door, the controller compares the stored force values with the actual values required and automatically adjusts the stored values upon reaching the end position.

Check: See chapter “Care and maintenance/regular testing”.

Programming the hand-held remote control

NOTE!
Before programming the hand-held transmitter for the first time, always clear the radio receiver memory completely.

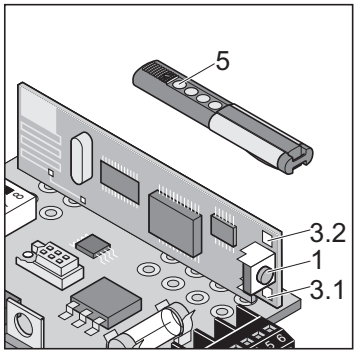

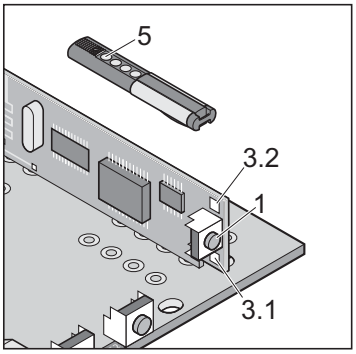

Deleting the radio receiver memory

1. Press and hold the Learn button (1).
   ⇒ After 5 seconds, the LED flashes (3.1 or 3.2).
   ⇒ After another 10 seconds, the LED lights up steadily (3.1 or 3.2).
   ⇒ After a total of 25 seconds, all LEDs light up steadily (3.1 and 3.2).
2. Release the Learn button (1) – the deletion procedure is ended.

Programming the hand-held remote control

1. Press the Learn button (1).
   - 1x for channel 1; the LED (3.1) lights up.
   - 2x for channel 2; the LED (3.2) lights up.
   ⇒ If no code is sent within 10 seconds, the radio receiver switches to Normal mode.
2. Press the desired hand-held transmitter button (5) until the LED (3.1/3.2) extinguishes, depending upon which channel has been selected.
   ⇒ LED extinguishes – programming is finished.
   ⇒ The hand-held transmitter has transferred the radio code to the radio transmitter.
3. For the additional programming of hand-held transmitters, repeat the steps above. A maximum of 112 memory locations are available for each radio receiver.

Interrupting the Learn mode:

Press the Learn button (1) until no more LEDs are lit.

Mount the information sign

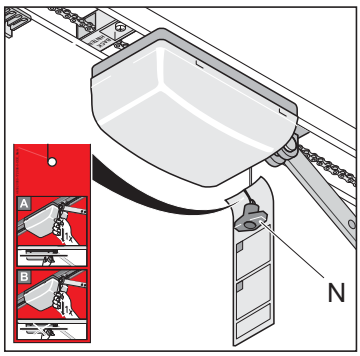

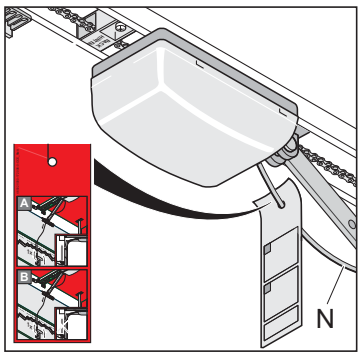

The information sign concerning the function of the emergency release; please hang on the emergency release cord.

Attaching the warning sign

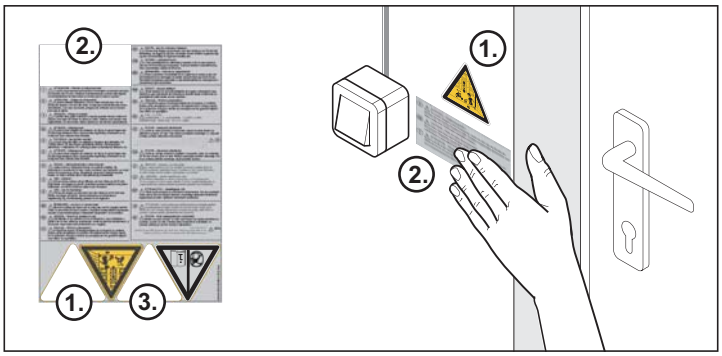

Please attach the warning signs (text + triangle sign) to a position where they are clearly visible, e.g. beside the pushbutton (warning triangle) and on the door wing (text + warning triangle).

NOTE!
See chapter “Cleaning chains and drive unit rail”.

Place the sticker on a clearly visible location near the running rail.

Operation/Use

Safety instructions

- Continuously monitor the door while it is in motion and keep all persons away from it until the door is completely opened or closed.
- Never put your hand near the door when it is moving or near moving parts.
- Only pass through the door only once it is completely open.
- There is a risk of persons being crushed or cut by the mechanism or sharp edges of the door.

Open door

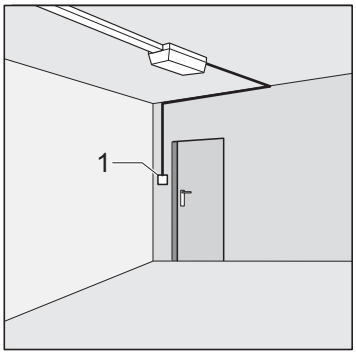

1. Press button (1) or hand-held transmitter button once to open the door.
2. Press the button (1) again for the door movement “OPEN”.
   ⇒ The door stays in place (depending on DIP switch 7).
3. If the door has stopped, press the button (1) again.
   ⇒ The door closes (depending on DIP switch 7).

Close door

1. Press button (1) or hand-held transmitter button to close the door.
2. Press the button (1) again for the door movement “CLOSE”.
   ⇒ The door stays in place (depending on DIP switch 7).
3. If the door has stopped, press the button (1) again.
   ⇒ The door opens (depending on DIP switch 7).

Pulse sequence of door movement

Set pulse sequence with DIP switch 7.

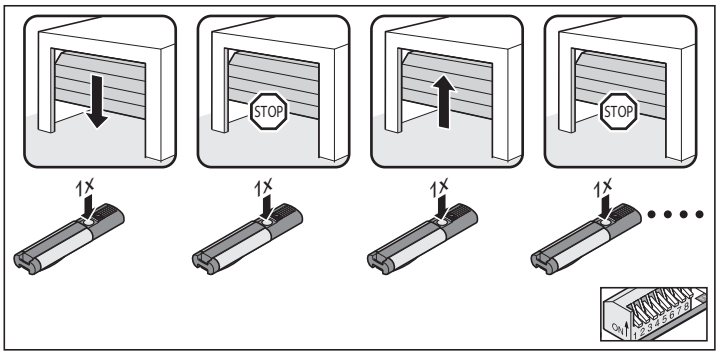

DIP 7 OFF, standard setting for all drives (see diagram):

- Open - Stop - Close - Stop - Open …

DIP 7 ON:

- Button 1: Open - Stop - Open - Stop - …
- Button 2: Close - Stop - Close - Stop - …

Emergency release

ATTENTION!

The emergency release is only suitable for opening or closing the door in case of an emergency, e.g. a power outage or drive failure. It is not suitable for regularly opening or closing the door for other reasons. This could cause damage to the drive or door.

DANGER OF FALLING!

In case of an emergency release, the door could independently open or close itself due to a broken spring or incorrect setting of the weight balancing. The drive could be damaged or destroyed.

NOTE!

It can be locked and released in any door position.

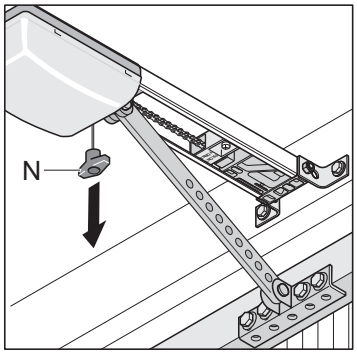

1. Pull once on the emergency unlocking cord (N).
   ⇒ The drive moves freely and the door can be moved manually.
2. Pull on the emergency unlocking cord (N) again.
   ⇒ The drive clicks into place and the door can only be moved mechanically.

NOTE!

If there is a slip door installed in the door but no slip door safeguard – install a slip door safeguard (see accessories instructions).
If the garage door does not have a built-in slip door or the garage does not have a separate entrance, you must install an emergency release – a release lock or Bowden cable – that can be operated from outside (see accessories instructions).

Control unit reset

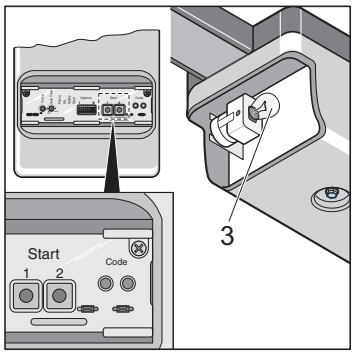

1. Press buttons 1 + 2 until the light bulb (3) extinguishes.
   ⇒ Light bulb (3) off – force values deleted.
2. Release buttons 1 and 2.
   ⇒ Light bulb (3) blinks and controller reset has been successfully performed.

The light bulb behaves differently depending on the DIP switch:

- DIP switch 4 ON,
  light bulb (2) lights up after the controller reset.
- DIP switch 4 OFF,
  light bulb (2) blinks after the controller reset.

NOTE!
After a controller reset, the drive must be reprogrammed.

Intermediate stop

An intermediate stop, caused by actuating a button or hand-held remote control, immediately stops the drive. At the next command the drive moves in the opposite direction; see chapter “Operation/use – pulse sequence of door movement”.

Safety stop 1 (power cut-off)

For a power cut-off, the drive stops or reverses. At the next command the drive moves in the opposite direction; see chapter “Operation/use – pulse sequence of door movement”.

- Safety stop when closing the door: the door reverses
- Safety stop when opening the door: the door stops

Safety stop 2 (safety input)

When the safety input is triggered (e.g. if someone has gone across the photo eyes), the drive stops, reverses or opens depending on the setting of the DIP switches.

Explanations of and setting options for the DIP switches can be found in the chapter “Functions and connections – obstacle detection”.

Factory settings: DIP switches 1 and 3 OFF:

- Door reverses if safety input is triggered while the door is closing.
- If the safety input is activated while the door is opening, there is no reaction (the door continues to open).

Overload protection

If the drive is overloaded during opening or closing, the control system detects it and stops the drive. After about 20 seconds or a control system reset, the control system releases the overload protection again.

The drive can now resume operation.

Operation after a power failure

The programmed force values are retained in the event of a power failure. The first movement of the drive after a power failure is always door OPEN.

Radio receiver

HOMELINK-COMPATIBLE!
If your vehicle is equipped with a HomeLink system (version 7), our drive and radio receiver with 868.6 MHz are compatible. Another radio frequency (40.685 or 434.42 MHz) must be used with older HomeLink systems. For information see: http://www.eurohomelink.com.

Safety instructions

- The local safety regulations for the system must be complied with to ensure safe operation. Information is available from electric power providers, industry associations (such as the German VDE) and employers' liability insurance providers.
- The operator is not protected against interference caused by other telecommunications equipment or devices (e.g. wireless systems which are being operated properly in the same frequency range).
- Replace the hand-held transmitter unit's batteries if you experience reception problems.

Display and button explanation

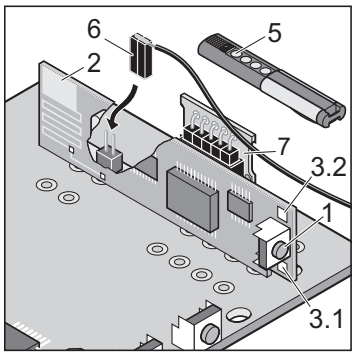

1	Learn button – sets the radio receiver in different operating modes: • Learn mode • Delete mode • Normal mode
2	Internal antenna
3	LEDs – show which channel has been selected. • 3.1 LED channel 1 • 3.2 LED channel 2
4	Connection for an external antenna. An external antenna (6) can be used if the range with the internal antenna is insufficient.
5	Hand-held transmitter button
6	External antenna
7	Storage module for radio codes (448 different ones), plug-in. Special marathon 800 + 1100 SL version

Programming the hand-held remote control

1. Press the Learn button (1).
   - 1x for channel 1; the LED (3.1) lights up
   - 2x for channel 2; the LED (3.2) lights up
   ⇒ If no code is sent within 10 seconds, the radio receiver switches to Normal mode.
2. Press the desired hand-held transmitter button (5) until the LED (3.1/3.2) extinguishes, depending upon which channel has been selected.
   ⇒ LED extinguishes – programming is finished.
   ⇒ The hand-held transmitter has transferred the radio code to the radio transmitter.
3. For the additional programming of hand-held transmitters, repeat the steps above. A maximum of 112 memory locations are available for each radio receiver.

Interrupting the Learn mode:

Press the Learn button (1) until no more LEDs are lit.

Deleting a hand-held remote control button from the radio receiver

If a user moves to a group garage unit and wishes to use the hand-held transmitter with it, all radio codes in the transmitter must be deleted from the radio receiver.

For safety reasons every button and all button combinations must be deleted from the hand-held transmitter.

1. Press the Learn button (1) and keep it pressed for five seconds.
   ⇒ An LED blinks (which one is irrelevant).
2. Release the Learn button (1).
   ⇒ The radio receiver is in Deletion mode.
3. Press the hand-held transmitter button whose code should be deleted in the radio receiver.
   ⇒ The LED extinguishes. The deletion procedure is ended.
4. Repeat the procedure for all buttons and button shortcuts.

Deleting a channel from the radio receiver

1. Press and hold the Learn button (1).
   - 1x for channel 1; the LED (3.1) lights up
   - 2x for channel 2; the LED (3.2) lights up
   ⇒ After 5 seconds, the LED flashes (3.1 or 3.2).
   ⇒ After another 10 seconds, the LED lights up steadily (3.1 or 3.2).
2. Release the Learn button (1).
   ⇒ The deletion procedure is ended.

Deleting the radio receiver memory

If a hand-held transmitter is lost, all channels in the radio receiver must be deleted for security reasons. Afterward, the radio receivers of all hand-held remote control must be reprogrammed.

1. Press and hold the Learn button (1).
   ⇒ After 5 seconds, the LED flashes (3.1 or 3.2).
   ⇒ After another 10 seconds, the LED lights up steadily (3.1 or 3.2).
   ⇒ After a total of 25 seconds, all LEDs light up steadily (3.1 and 3.2).
2. Release the Learn button (1) – the deletion procedure is ended.

Connecting external antenna

If reception is inadequate with the radio receiver internal antenna, an external antenna can be connected; see chapter “Functions and connections – connecting an external antenna”.

The antenna cable may not exert any mechanical force on the radio receiver; provide for stress relief.

What is button 2 for?

Button 2 is defined for opening and closing the door by means of two different buttons or channels (2-channel operation).
This way the door can be opened with one button and closed with the other.

If this function is utilized, 2 buttons can be connected. For details on settings, see chapter “Functions and connections – connecting button 2” and chapter “Functions and connections – defined opening and closing (DIP 7)” as well as “Partial opening (DIP 8)”.

Functions and connections

General information

- As delivered, DIP switches are set to the “OFF” position, all additional functions are switched off.
- Depending on the position (OFF or ON) of a DIP switch, additional functions can be switched on off.

Obstacle detection (DIP 1, 2 + 3)

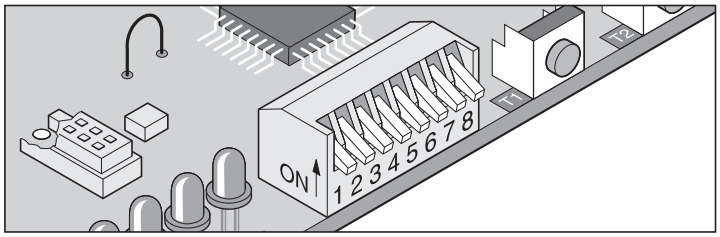

Drive behavior when opening the door

If the door encounters an obstacle (power cut-off) or a safety input is interrupted (e.g. someone passes through the photo eye), the drive detects this and reacts according to the setting of DIP switch 1.

DIP switch 1

OFF	No reaction during an interruption of a safety input. The door stops during a power cut-off.
ON	The drive stops the door. (No reaction with 8.2 kOhm, Fraba system)

Drive behavior when closing the door

If the door encounters an obstacle (power cut-off) or a safety input is interrupted (e.g. someone passes through the photo eye), the drive detects this and reacts according to the setting of DIP switches 2 + 3.

DIP switch 2: Safety connection 1, terminals 6 + 7 function

OFF	NC contact for photo eyes/8.2 kOhm (safety contact strip)
ON	Fraba system

DIP switch 3

OFF	Drive stops and opens the stop slightly, reversion.
ON	The drive stops and opens the door completely.

Mode of operation: safety connection 1 (DIP 2)

NOTE!
In the OFF position, the drive automatically detects whether a photo eye or an 8.2 kOhm strip is connected.

DIP switch 2 (terminals 6 + 7)

OFF	Photo eyes/8.2 kOhm safety contact strip
ON	Fraba system

Prewarning time (DIP 5)

The warning light blinks, after 3-second actuation of the button or hand-held remote control, before the drive starts and the drive is to open or close the door. The prewarning time is cancelled if the button or hand-held remote control is actuated again within this timeframe.

The prewarning time affects both the internal illumination and a connected warning light.

DIP switch 5

OFF	deactivated
ON	activated

Backjump (DIP 6)

NOTE!
You can activate Backjump for sectional doors or doors with ceiling guides by means of DIP switch 6; this relieves the drive and door mechanisms. Simpler actuation of the emergency release.

Serves to relieve the door and drive mechanical system. After reaching the door CLOSE end position, the drive moves in the direction of door OPEN, relieving the mechanical system.

DIP switch 6

OFF	deactivated
ON	activated

Defined opening and closing (DIP 7)

Button/channel 1 open and button/channel 2 close the door. The 2-channel mode can also be used with only 2 buttons or with hand-held remote controls.

Requirement: DIP switch 8 OFF, 2 buttons connected or 2 hand-held transmitter buttons programmed.

DIP switch 7

OFF	deactivated
ON	activated

Partial opening (DIP 8)

Depending on the setting, this function partially opens the door.

Use examples: airing out the garage, opening the side-sectional door for personal access, and many others. Two buttons or a hand-held remote control are necessary for partial opening.

DIP switch 8

OFF	deactivated
ON	activated, DIP switch 7 non-functional

Partial opening with 2 buttons

Install additional button and connect to terminals 4 + 5 as button 2.

Button 1 always opens the door completely.
If the door is partially opened with button 2, pressing button 1 opens the door completely.

Button 2 performs the partial opening only if the door is closed.
If the door is to be completely opened with button 1 or partially opened with button 2, pressing button 2 again closes the door.

Procedure:

1. Close door.
2. DIP switch 8 ON activates partial opening.
   ⇒ Always leave DIP switch 8 set to ON, the OFF setting immediately deletes the set partial opening.
3. Press button 2 (open door from CLOSED end position).
   ⇒ Door opens until button 2 is pressed again or the door reaches the “door OPEN” end position.
4. Press button 2 once the desired position is reached.
5. Close door with button 2.
   ⇒ Partial opening saved; pressing button 2 opens the door to the saved position.

NOTE!
Set DIP switch 8 to OFF to delete the partial opening setting.

Partial opening with the hand-held remote control (2-channel operation)

Programming the 2 buttons of the remote control:
e.g. button 1 on radio channel 1 and button 2 on radio channel 2

Radio channel 1 always has the same function as button 1, terminals 2 + 3

Radio channel 2 always has the same function as button 2, terminals 4 + 5

Procedure as described above.

Automatic closing (DIP 4)

NOTE!
When using the automatic close function, ensure compliance with standard EN 12453 (e.g. install photo eye 1). An additional photo eye can be connected to the safety connection 2; this serves as upper retraction safety.

ATTENTION!
Always install the slip door safeguard on the safety input 2 (terminals 8 + 9). If the slip door safeguard is connected to the carriage, the drive will not detect the door position.

The door closes automatically after a certain stay-open time, as set with the potentiometer. The door can only be opened but not closed by a command from a button or hand-held remote control. While the door is being opened, it cannot be stopped by a command.

If a command is sent while the door is automatically closing, it will open completely. A command during the opening time will start the procedure again from the beginning.

NOTE!
If you use both the partial opening and automatic closing functions together, first set partial opening and then automatic closing.

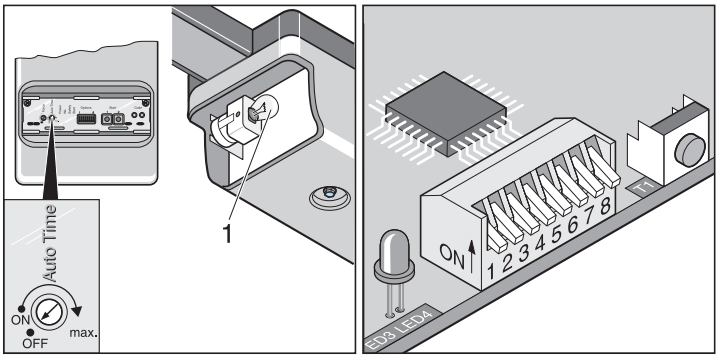

Set the stay-open time with the potentiometer:

1. The stay-open time can be set as desired for between 1–120 seconds. Turn the potentiometer in the ON range (1 second increments) for up to 120 seconds.
2. To switch off the stay-open time, turn the potentiometer to the left until it stops at OFF.

Behavior of drive when safety inputs 1 + 2 are triggered

During door close:
Drive always opens door completely, regardless of the setting of DIP switch 3.

During door open:
Drive behavior depends on the setting of DIP switch 1.

Two-lane control with red traffic light

ATTENTION!
Disconnect internal lighting and do not reconnect.

Both red traffic lights act the same; they blink every time the door is in motion.

- Outside red traffic light: terminals 16 + 17, outside of the garage
- Inside red traffic light: terminals 18 + 19, inside of the garage

Variant 1: automatic closing function

Automatic closing is activated when the door OPEN end position is reached. The stay-open time set with the potentiometer starts at this point. If a command is transmitted during this period, the time period starts again.

Settings:

- Set the potentiometer for the desired time (1–120 seconds)
- DIP switch 7 + 8 OFF
- other DIP switches as desired

Variant 2: automatic closing + photo eye

NOTE!
Install a switch in the photo eye supply line for manual interruption of automatic close.

However, as described above, the drive closes the door 5 seconds after crossing the photo eye.

Settings:

- Set the potentiometer for the desired time (1–120 seconds)
- DIP switch 1, 2, 7 + 8 OFF
- DIP switch 4 ON
- other DIP switches as desired

Variant 3: automatic closing + safety contact strip (8.2 kOhm) + photo eye

NOTE!
Install a switch in the photo eye supply line for manual interruption of automatic close.

However, as described above, the drive closes the door 5 seconds after crossing the photo eye.

Connect the photo eye in sequence with the safety contact strip to the terminal 6 + 7.

Settings:

- Set the potentiometer for the desired time (1–120 seconds)
- DIP switch 1, 2, 7 + 8 OFF
- DIP switch 4 ON
- other DIP switches as desired

Direct connector, 24-pole

- Permissible cable gauge: max. 1.5 mm².

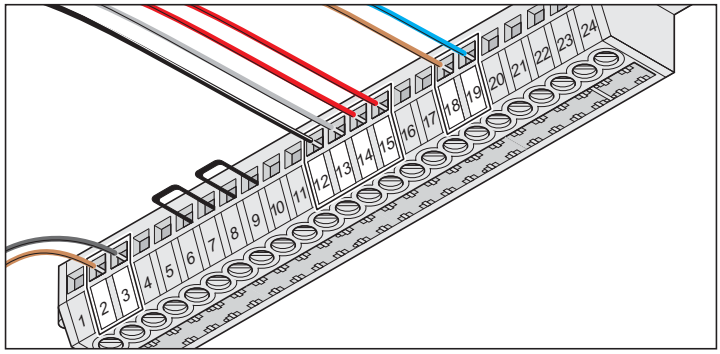

- Cable length max. 10 m (at the terminal): 10 + 11, 16 + 17, 18 + 19, 20 + 21
- Cable length max. 30 m (at the terminal): 2 + 3, 4 + 5, 6 + 7, 8 + 9

Terminal 1	Connection of the 40 MHz antenna
Terminals 2 + 3	Button 1 (potential-free NO contact) *
Terminals 4 + 5	Button 2 (potential-free NO contact) *
Terminals 6 + 7	Safety input terminal 1 (jumper) *
Terminals 8 + 9	Safety input terminal 2 (jumper) *
Terminals 10 + 11	Regulated DC 24 V, max. 0.1 A
Terminals 12 + 13	Chain (12) + C-rail (13) *
Terminals 14 + 15	Secondary transformer *
Terminals 16 + 17	Warning light 1, unregulated DC 24 V
Terminals 18 + 19	Internal lighting/warning light 2, unregulated DC 24 V *
Terminals 20 + 21	Unregulated DC 12 V
Terminal 22	Unassigned
Terminals 23 + 24	Floating relay output, AC 230 V, max. 5 A

* Factory-set assignment

Carriage circuit board

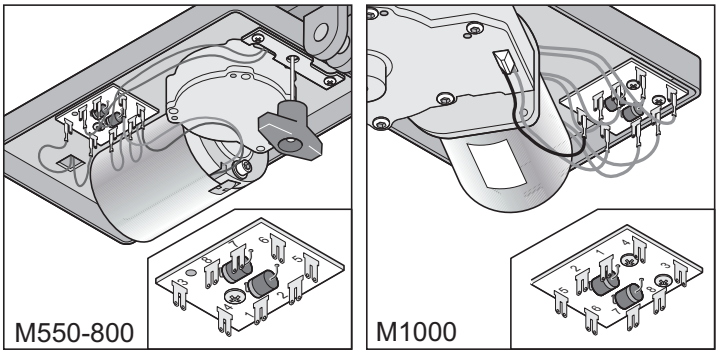

Terminal 1	Chain current draw
Terminal 2	Rail current draw
Terminals 3 + 4	Door OPEN
Terminal 5	Motor cable
Terminal 6	Motor cable
Terminals 7 + 8	End switch door CLOSE

Connect button 1

ATTENTION!
Only use the connection for potential-free closer contacts. External voltage can damage or destroy the controller.

As-delivered status: Button cable connected to button 1.

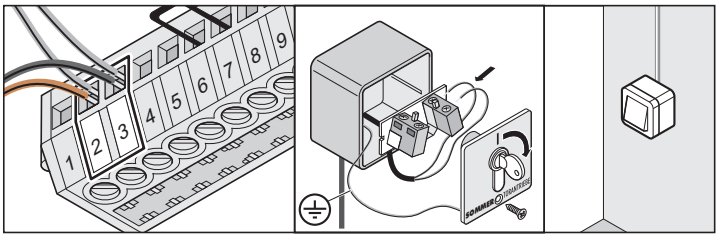

Terminals 2 + 3	Button 1 connection

Connect button 2

ATTENTION!
Only use the connection for potential-free closer contacts. External voltage can damage or destroy the controller.

Use button 2 as necessary for the functions described in the following.

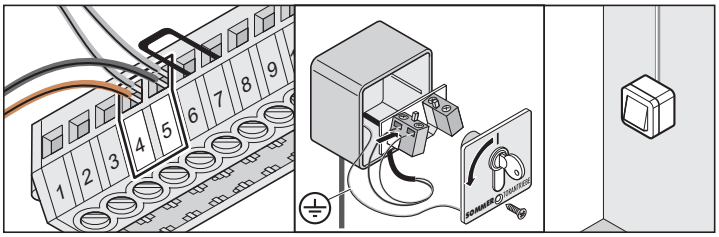

Terminals 4 + 5	Button 2 connection

Button 2 is only required for the “Defined opening and closing” or “Partial opening” functions.

Functions and connections

Connecting photo eye 1

As-delivered status: Jumper

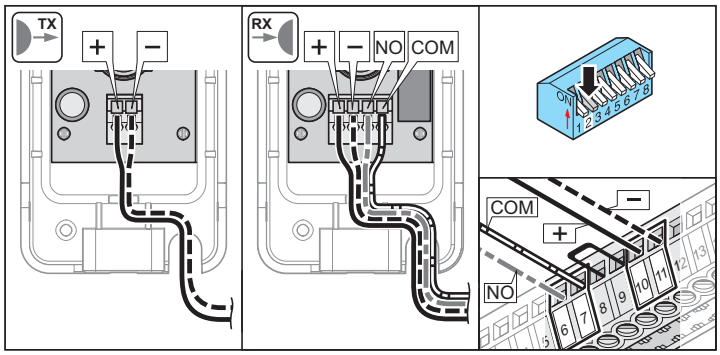

Terminals 6 + 7	Tested connection for floating contacts, **only if DIP switch 2 OFF**.
Terminals 10 + 11	Regulated DC 24 V, max. 0.1 A Terminal 10: DC 24 V Terminal 11: ground

Settings: see Obstacle detection (DIP 1, 2 + 3)

Connect 8.2 kOhm strip

As-delivered status: jumper

Analysis 8.2 kOhm. Connection without a special analytical device.

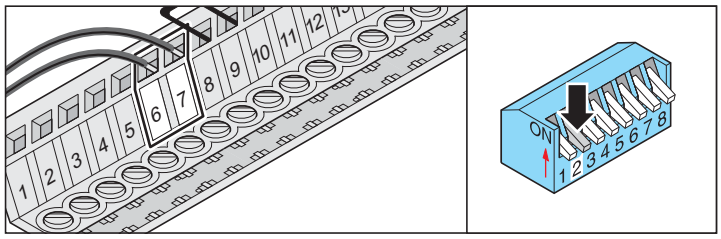

Terminals 6 + 7	Tested connection for an 8.2 kOhm resistor, **DIP switch 2 OFF**. Terminal 6: + (brown) Terminal 7: ground (white or blue)

Settings: see Obstacle detection (DIP 1, 2 + 3)

Connecting photo eye 2

As-delivered status: jumper

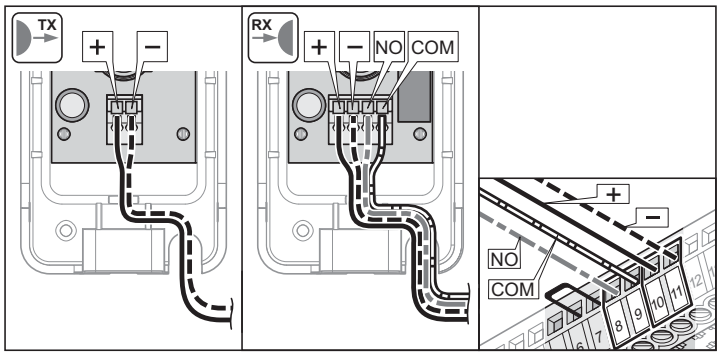

Terminals 8 + 9	Tested connection for floating contacts, **reacts only with door open**.
Terminals 10 + 11	Regulated DC 24 V, max. 0.1 A Terminal 10: DC 24 V Terminal 11: ground

Chain and C-rail

NOTE!
Reverse the connections (terminals 12 + 13) when using the drive for a hinged double door.

As-delivered status: connected

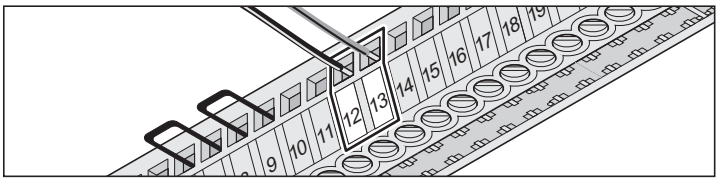

Terminal 12	Chain
Terminal 13	C-rail

24 V connection

As-delivered status: unassigned

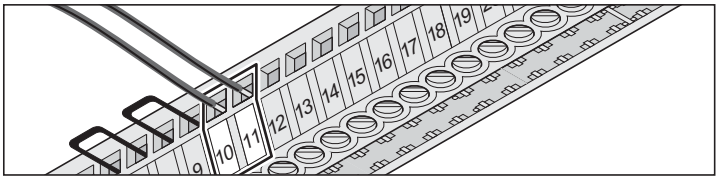

Terminals 10 + 11	Regulated DC 24 V, max. 0.1 A Terminal 10: DC 24 V Terminal 11: ground

Transformer

As-delivered status: connected

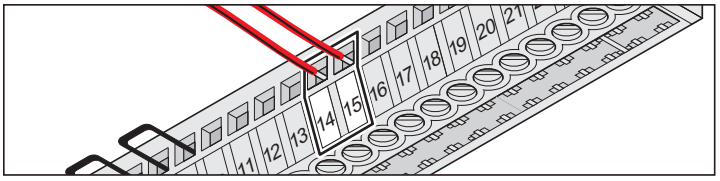

Terminals 14 + 15	Secondary transformer

Connecting warning light 1

As-delivered status: unassigned

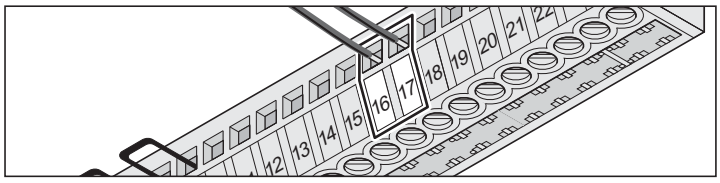

Terminals 16 + 17	Unregulated DC 24 V (max. 34 V) 21 watt, max. 1 A

Safeguarded by 1 A fast-acting fuse

Functions and connections

Connecting warning light 2

As-delivered status: Internal lighting connected.

For the automatic closing function, an external warning light can be connected here; disconnect internal lighting.

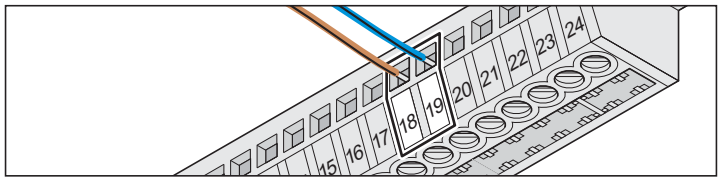

Terminals 18 + 19 Unregulated DC 24 V (max. 34 V) 21 watt, max. 1 A

Safeguarded by 1 A fast-acting fuse

12 V connection

As-delivered status: unassigned

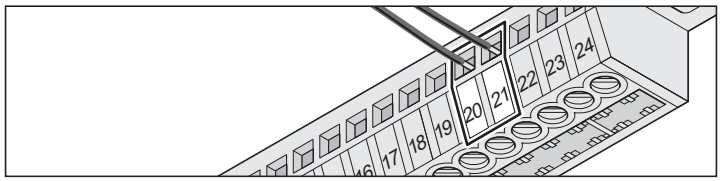

Terminals 20 + 21 Regulated DC 12 V, max. 0.1 A
Terminal 20: DC 12 V
Terminal 21: ground

Floating relay output

As-delivered status: unassigned

Every time the drive is started, a pulse is pending at the relay output that can be used to switch on lights in a stairwell, for example.

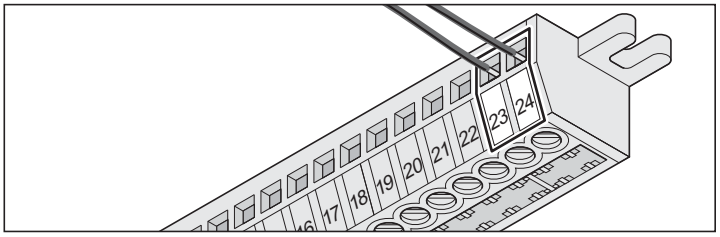

Terminals 23 + 24 AC 230 V, max. 5 A

Change settings, only by means of TorMinal

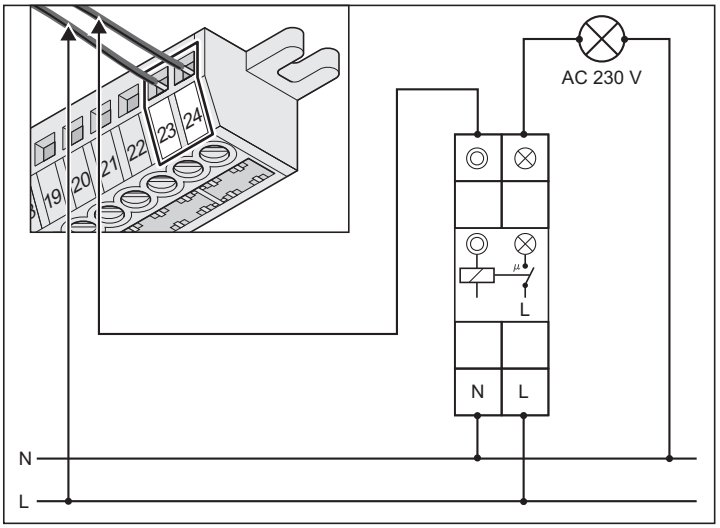

Example: automatic lights in stairwell

Connecting external antenna

As-delivered status: unassigned

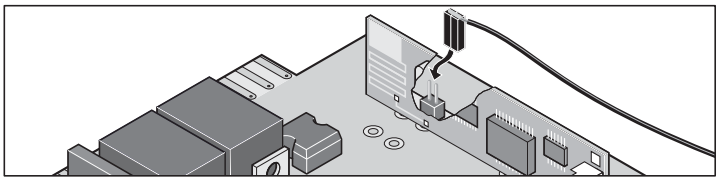

TorMinal interface

See TorMinal owner's manual.

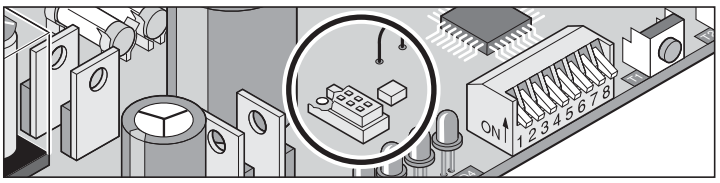

Connecting Fraba system

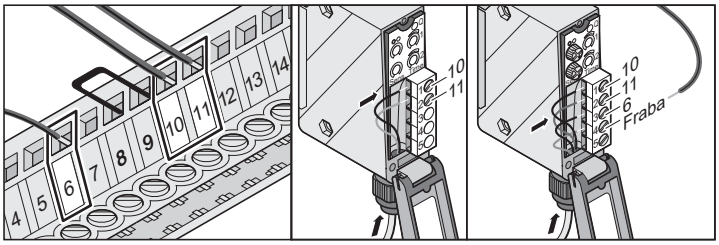

Terminal 6	Green cable from Fraba system, **only if DIP switch 2 ON**.
Terminal 20	Brown cable from Fraba system
Terminal 21	White cable from Fraba system

Variant 1: Fraba system + photo eyes

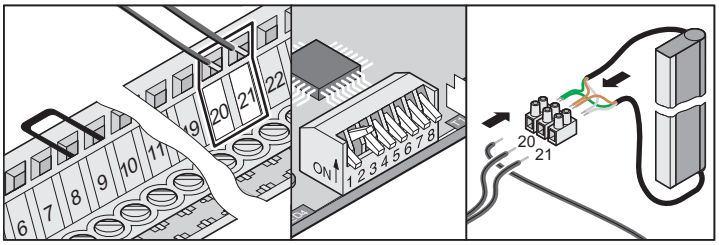

Terminal 6	Green cable from Fraba system via photo eyes, **only if DIP switch 2 ON**.
Terminals 10 + 11	Regulated DC 24 V, max. 0.1 A 10: DC 24 V 11: ground
Terminal 20	Brown cable from Fraba system (DC 12 V)
Terminal 21	White cable from Fraba system (ground)

Settings: see chapter “Functions and connections – obstacle detection”.

Special functions

Deadman operation

Door status display

Service monitor

This and additional functions or settings require the TorMinal. Explanations of the special functions can be found in the TorMinal operating instructions.

Maintenance and care

General information

DANGER!
Never use a hose or high-pressure cleaner to spray down the drive or the controller housing.

- Always disconnect the mains plug prior to working on the drive mechanism.
- Do not use acids or alkalis for cleaning.
- Wipe drive clean with a dry cloth as required.
- Never put your hand near the door when it is moving or near moving parts.
- There is a risk of persons being crushed or cut by the mechanism or sharp edges of the door.
- Check the mounting screws and bolts of the drive for tightness and tighten if necessary.
- Check the door according to the manufacturer's manual.

Cleaning chains and drive unit rail

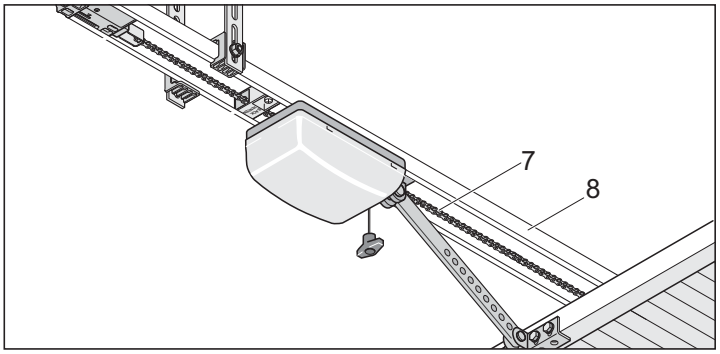

1. Chain (7) or the drive unit rail (8) is very dirty – cleanse it with a clean cloth.
2. If necessary, lubricate the chain (7) and drive unit rail (8) with a “conductive” oil. Do not use any grease!

NOTE!
Specified types of oil: Ballistol, WD40 contact spray.

Replacing light bulbs

1. Unplug the mains plug from the socket.

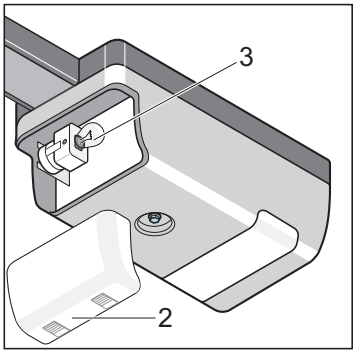

2. Remove lamp lenses (2).
3. Unscrew the light bulb (3) by turning it counterclockwise and removing it.
4. Insert new light bulb (32.5 V, 34 W, BA 15 s or 24 V 21 Watt, BA 15 s) and turn clockwise until it is firmly screwed in.

Replacing fuse (warning light connection)

1. Unplug the mains plug from the socket.

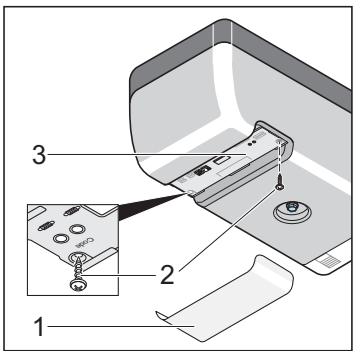

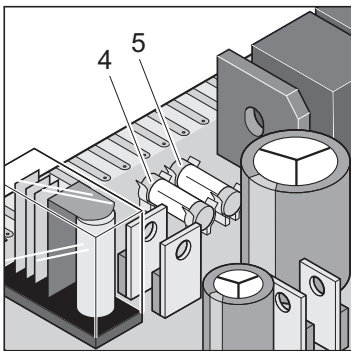

2. Remove lamp lenses (2).
3. Unscrew two screws (1).
4. Remove controller (3).
5. Replace defective fuse; all fuses are 1 A fast-acting fuse. Fuse (5) for connection of warning light, terminals 11 + 12.

Maintenance and care

Regular testing

Regularly check that the safety devices function correctly; no less than every six months. See EN 12453:2000.

Check every four weeks to ensure that pressure-sensitive safety devices (e.g. safety contact strip) are operating correctly.
(See EN 60335-2-95:11-2005).
In particular, check whether the drive reverses correctly when it encounters a 50 mm high obstacle lying on the ground. Correctly adjust if necessary and recheck; an incorrect setting presents a hazard.

Testing	Behavior	yes/no	Possible cause	Remedy
Force cut-off. Try to stop the door wing while it is closing with a 50 mm high object.	Does the drive reverse when it encounters the object?	yes	• The force cut-off works without limitations.	• Leave all settings as they are.
		no	• Door incorrectly adjusted.	• Adjust door, call a technician.
Emergency release. Proceed as described in the chapter “Operation/use – emergency release”.	The emergency release can be easily actuated (pull once and the drive releases).	yes	• Everything is OK.	
		no	• Drive forces the door closed. Door and drive mechanism is stressed.	• Adjust door CLOSE end switch or switch on Backjump (DIP switch 6 ON).
			• Emergency release defective.	• Repair emergency release.
			• Door jams	• Check door, see door owner's manual.
Safety contact strip, if present. Open and close the door and actuate the strip at the same time.	Adjust the behavior of the door, as set with DIP switch 1, 2 or 3. Safety LED lights continuously.	yes	• Everything is OK.	
		no	• Cable breakage, terminal loose.	• Check the wiring; retighten the terminals.
			• DIP switch adjusted.	• Setting the DIP switches.
			• Strip defective.	• Decommission the system and lock it to prevent reactivation. Then, contact customer service.
Photo eye, if present. Open and close the door while interrupting the photo eye.	Adjust the behavior of the door, as set with DIP switch 1, 2 or 3. Safety LED lights up.	yes	• Everything is OK.	
		no	• Cable breakage, terminal loose.	• Check the wiring; retighten the terminals.
			• DIP switch adjusted.	• Setting the DIP switches.
			• Photo eye dirty.	• Clean the photo eyes.
			• Photo eye misadjusted (holder bent).	• Adjust photo eyes.
			• Photo eye defective.	• Decommission the system and safeguard it to prevent reactivation. Then, contact customer service.

Miscellaneous

Disassembly

IMPORTANT!
Observe safety information.

The sequence is identical to that described in the “Installation” section, but in reverse order. Ignore the setting instructions.

Disposal

Observe applicable national regulations.

Warranty and customer service

The warranty complies with statutory requirements. The contact person for warranties is the specialist retailer.

The warranty is only valid in the country in which the drive was purchased.

Batteries, fuses and bulbs are excluded from the warranty.

If you require after-sales service, spare parts or accessories, please contact your specialist retailer.

We have tried to make the Installation and Operating Instructions as easy as possible to follow. If you have any suggestions as to how we could improve them or if you think more information is needed, please send your suggestions to us:

Fax: +49 (0)7021-8001403

Email: doku@sommer.eu

Troubleshooting

Tips on troubleshooting

HOMELINK-COMPATIBLE!
If your vehicle is equipped with a HomeLink system (Version 7), our drive and radio receiver with 868.6 MHz are compatible. Another radio frequency (40.685 or 434.42 MHz) must be used with older HomeLink systems. Information can be found under http://www.eurohomelink.com or contact your specialist dealer.

IMPORTANT!
Many malfunctions can be resolved by a controller reset (delete force values), then reprogram the drive.

If you cannot find the malfunction in the table and eliminate it, take the following actions:

- Perform a controller reset (delete force values) on the controller.
- Disconnect connected accessories (e.g. photo eyes) and reconnect the jumper for a safety connection.
- Set all DIP switches to the factory setting.
- If settings have been changed using TorMinal, perform the controller reset with TorMinal.
- Check all connections on the direct connectors and terminal strip and retighten if necessary.

Drive malfunctions can be corrected according to the following table. If this does not help, contact your specialist dealer for assistance or consult our website at http://www.sommer.eu.

Malfunction	Possible causes	Corrective action
Lighting blinks.	Drive has not been programmed, no force values stored.	Program the drive. See chapter “Using for the first time – programming the drive”.
Drive does not function and lights do not light up.	No voltage present.	Stick in the power mains plug.
	No controller installed.	Install controller.
	Circuit breaker for garage circuit has tripped.	Replace circuit breaker, check circuit with a different consumer device (e.g. electric drill).
No lights when opening and closing the door.	Defective bulb.	Replace light bulb. See chapter “Care and maintenance/regular testing”.
Drive doesn't function.	Controller incorrectly installed.	Plug controller correctly into terminal strip.
	Photo eyes interrupted, safety LED lights continuously.	Remove interruption.
	The (8.2 kOhm) safety contact strip is defective or DIP switch 2 is ON; the Safety LED lights up.	Replace the safety contact strip or set DIP switch 2 to “OFF”.
	Fraba system switched on but photo eyes or safety contact strip (8.2 kOhm) connected, safety LED lights continuously.	Switch off the Fraba system; set DIP switch 2 to OFF.
Drive does not function when operated with a hand-held remote control.	Battery in the hand-held remote control is empty.	Replace battery with new one.
	The hand-held remote control has not been programmed for the radio receiver.	Programming the hand-held remote control.
	Incorrect radio frequency.	Check the frequency (868/434 MHz, without external antenna).
	The command is constantly pending because the button of the hand-held remote control is stuck.	Release the key or replace the hand-held remote control.
Drive does not function when button-operated.	Button not connected or is defective.	Connect button or replace it.
Door stops while closing, moves about 10 cm in the opposite direction, and stops.	Force cut-off actuated by an obstacle.	Remove obstacle, open door completely.
	Incorrect force values programmed or force tolerance set too low.	Delete force values and reprogram.
	Guide idler incorrectly adjusted.	Readjust the guide idler, see the chapter “Commissioning – adjusting the door Closed + Open end positions”.
	Door incorrectly adjusted or defective (e.g. spring shaft).	Have door adjusted or repaired by a technician.

Troubleshooting

Malfunction	Possible causes	Corrective action
Door stops while opening, moves about 10 cm in the opposite direction and stops.	Force cut-off actuated by an obstacle.	Remove obstacle. Move door completely to “door Close” end position using button.
	Incorrect force values programmed or force tolerance set too low.	Delete force values and reprogram.
	Guide idler incorrectly adjusted.	Readjust the guide idler, see the chapter “Commissioning – adjusting the door Closed + Open end positions”.
Door stops while opening.	Connected photo eye interrupted and DIP switch 1 is ON.	Eliminate interruption or turn DIP switch 2 to OFF.
Drive does not close the door.	Photo eyes power supply interrupted.	• Check connection. • Replace fuse.
	Drive has been disconnected from mains power supply.	The drive always opens the door completely upon first command after the power supply has been restored.
Drive opens the door and then does not respond to a command from the remote control or the button.	Safety input tripped (e.g. photo eyes defective). Safety LED lights continuously.	• Remove object from photo eye. • Repair photo eyes. • Controller not properly plugged in.
	Automatic closing function activated.	The door closes automatically after the set time has expired. Automatic closing function deactivated.
	“Door CLOSE” end switch in the carriage defective.	Replace end switch.
Drive closes the door and then does not respond to a command from the hand-held remote control or the button.	“Door OPEN” end switch in the carriage defective.	Replace end switch.
Connected warning light doesn't light up.	Defective fuse.	Replace fuse; see chapter “Maintenance and care – replace fuse (warning light connection)”.
	Defective bulb.	Replace light bulb of warning light.
Speed varies during opening and closing.	Drive starts slowly and then accelerates.	Soft running, completely normal.
	Chain rail dirty.	Clean the rail and lubricate again; see chapter “Care and maintenance – cleaning chains and drive unit rail”.
	Chain rail lubricated with incorrect oil.	Clean the rail and lubricate again; see chapter “Care and maintenance – cleaning chains and drive unit rail”.
	Chain tightened incorrectly.	Tighten the chain; see chapter “Installation – pre-installation”.
Drive does not end learning procedure.	End position incorrectly adjusted.	Adjust end position; see chapter “Commissioning – adjusting the door Closed + Open end positions”.
Door can only be actuated by holding the external buttons down (e.g. wall switch, key switch) – the internal lights flash during this process (deadman's operation).	Deadman's function activated.	Deactivate deadman's function; see the TorMinal manual.
Start LED lights up continuously.	Continuous signal at button connection 1 or 2.	Check connected button (key switch if connected).
	Continuous signal from radio receiver, LED 3.1 or 3.2 on radio receiver on. Radio signal is being received; button of hand-held remote control might be defective or an external signal is being received.	• Remove the battery from the hand-held remote control. • Wait until the external signal falls off.
Radio receiver only! All LEDs flashing.	All memory locations occupied, max. 112.	• Deleted any hand-held remote controls that are no longer needed. • Install additional radio receivers.
LED 3.1 or 3.2 lights up continuously.	The radio signal is being received; the button of a hand-held remote control might be defective or an external signal is present.	• Remove the battery from the hand-held remote control. • Wait until the external signal falls off.
LED 3.1 or 3.2 lights up.	The radio receiver is in the Learning mode and awaiting a radio code from a hand-held remote control.	Press the desired hand-held remote control button.

SOMMER Germany

SOMMER Antriebs- und Funktechnik GmbH

Hans-Böckler-Straße 21-27
73230 Kirchheim/Teck
Germany

Telephone: +49 7021 8001-0
Fax: +49 7021 8001-100

info@sommer.eu
www.sommer.eu

© Copyright 2017 All rights reserved.